We offer you Country Exclusivity for any product's from PDF catalog.

What you need to do, is to order samples with the net price. On selected product, we will publish information about public price and your data, so clients will contact you directly. You keep this exclusivity for the product as long as you buy something, every month.

We are practically selling our products for you with your price.

Contact us

Stainless steel sanitary ware catalogue - price list

Katalog der Sanitäranlagen

Catalogue des équipements sanitaires

Catálogo de equipos sanitarios.



NOFER®

2019



WANDA METROPOLITANO
MADRID, SPAIN


ATLÉTICO DE MADRID
BIENVENIDOS AL WANDA METROPOLITANO



LUZHNIKI STADIUM
MOSCOW, RUSSIA



HAND DRYERS 10

HAIR DRYERS 58

SOAP DISPENSERS 68

PAPER DISPENSERS 86

BATHROOM ACCESSORIES 110

STAINLESS STEEL SANITARY 194

BINS 248

COAT & LUGGAGE RACKS 262

GRAB BARS & TECHNICAL SUPPORT 264

EMERGENCY FAUCETS 300

WATER FOUNTAINS 308

BABY CHANGING UNITS 312

SELF-CLOSING FAUCETS 316

PROFESSIONAL FAUCETS 324

INSECT-KILLER 326

ADVERTISING SUPPORT & PROMOTION 330

SPECIAL PRICES 331

PRODUCT INDEX 334

SALE CONDITIONS 347

made in ES

Children

Hospital

Hotel

Technical aids

Older people

Vandal-proof

CODE Consult availability



Public bathrooms have always been inhospitable places, a dark space, an environment without design until...

NOFER® *from Barcelona* changed everything.

The city of Barcelona is a benchmark for European culture, industry and design.

NOFER® *from Barcelona* aspires to excellence in the quality of its materials, to innovation from its design, to the accuracy in controlling its production, to the efficiency of its service: quality, design, control, service...





NOFER® from Barcelona

creates public bathroom spaces for everyone. It gets into the user's skin to adapt to your needs... Regardless whatever its origin, its race, its customs, its limitations...



SECAMANOS - HAND DRYERS - SÈCHE
MAINS ÉLECTRIQUES - ASCIUGAMANI
ELLETRICI - **SECADORES DE MÃOS** -
SECAMANOS - HAND DRYERS - SÈCHE
MAINS ÉLECTRIQUES - **ASCIUGAMANI**
ELLETRICI - SECADORES DE MÃOS
SECAMANOS - HAND DRYERS - SÈCHE
MAINS ÉLECTRIQUES - ASCIUGAMANI
ELLETRICI - SECADORES DE MÃOS
SECAMANOS - HAND DRYERS - **SÈCHE**
MAINS ÉLECTRIQUES - ASCIUGAMANI
ELLETRICI - SECADORES DE MÃOS
SECAMANOS - **HAND DRYERS** - SÈCHE
MAINS ÉLECTRIQUES - ASCIUGAMANI
ELLETRICI - SECADORES DE MÃOS
SECAMANOS - HAND DRY CHE
MAINS ÉLECTRIQUES - AS IANI
ELLETRICI - SECADORES OS -



“Unity is variety, and variety in unity is the supreme law of the universe.”

Sir Isaac Newton


...regardless of their origin, race,
their customs, their limitations...
NOFER®

Eco Efficiency

- **Energy savings**, very low consumption.
- High speed motors for an **ultra fast drying** by dragging away the moisture in hands.
- Drying times: **6 – 12 seconds.**
- The high speed hand dryer is an **80% more energy-efficient** than the conventional hand dryers and a **95% more cost-effective** than the paper towels.
- **Leed Certification** (International green building certification program).

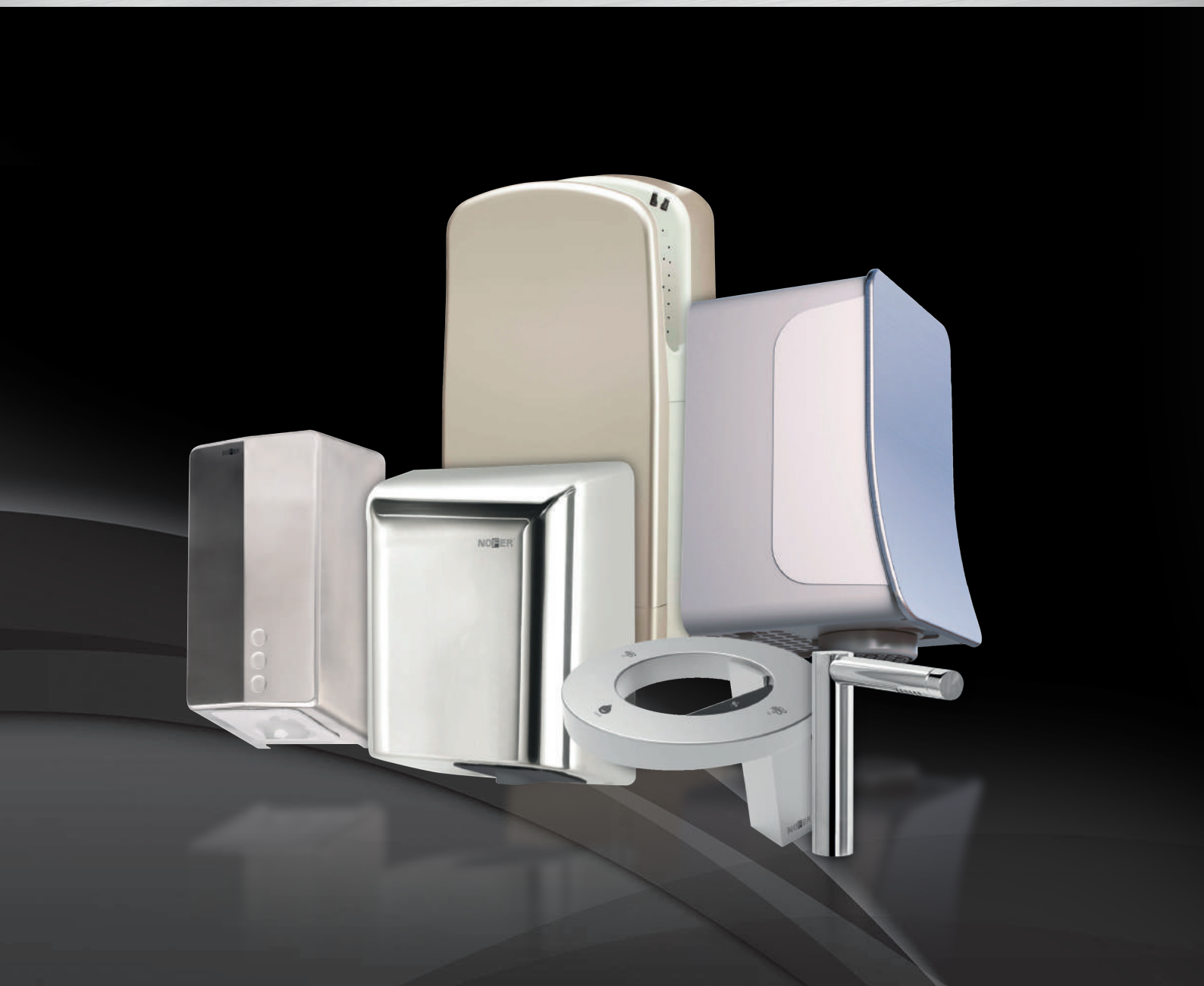


NOFER®

concept^3

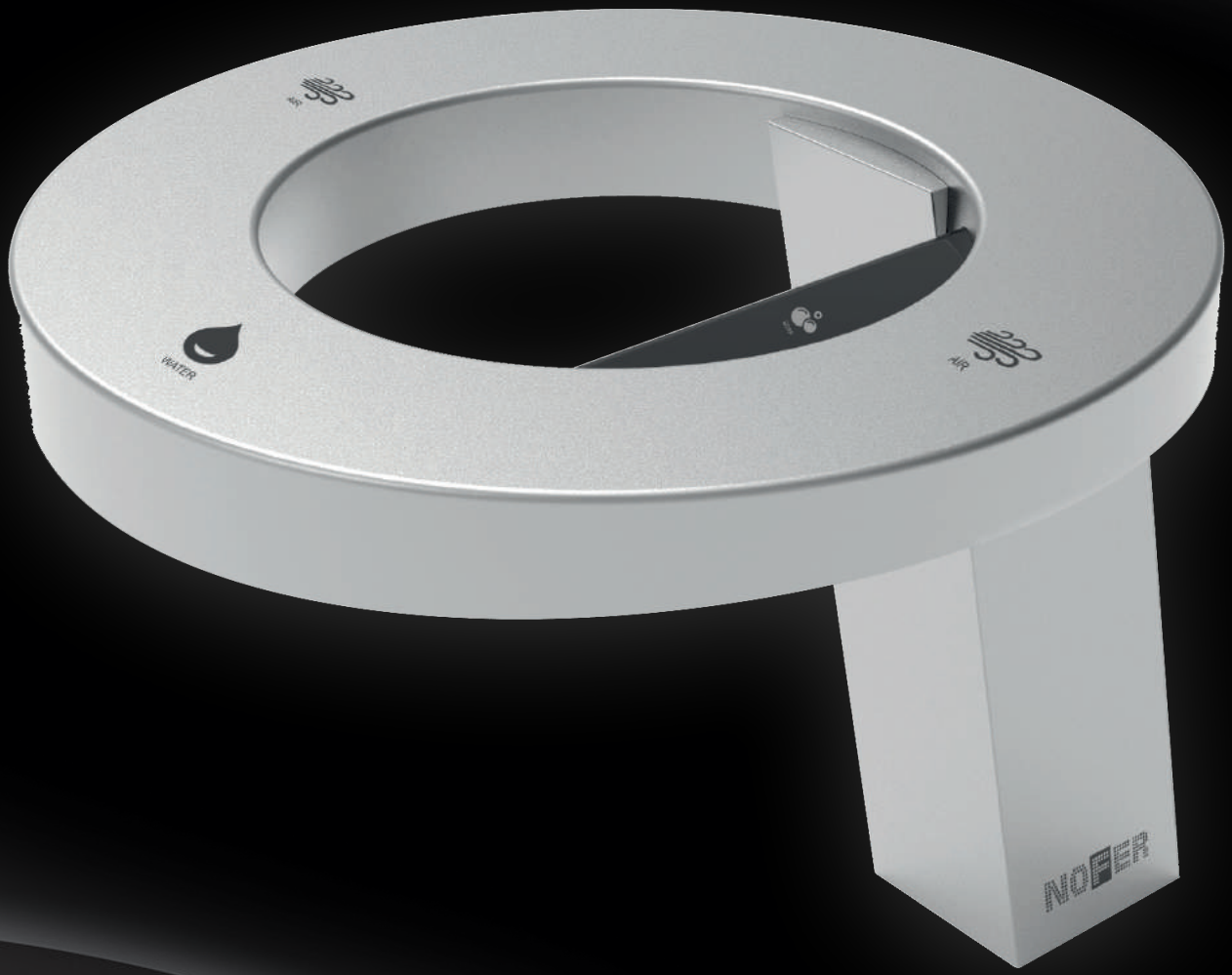

NOFER®

HAND DRYER - SOAP DISPENSER - TAP WITH ELECTRONIC SENSOR

Material
Anodised aluminium

concept³

NEW

Hand dryer, soap dispenser and tap set on countertop. 3 in 1 integrated sensor.

DISPENSER TAP	
Dimensions (01902 model)	317,5 x 230 x 268 mm
Dimensions (01901 model)	225 x 230 x 251,5 mm
Weight (01902 model)	2,5 kg
Weight (01901 model)	2,3 kg
Materials	Anodised aluminium / ABS / Brass
Activation	By sensors
Water consumption	3 - 7 L/m (3 Bar)
Aereator	Neopearl
Operation	Electronic sensor
Noise level at 2m	65 dbA
HAND DRYER	
Hand dryer box dimensions	180 x 322 x 180 mm
Hand dryer box weight	3,1 kg
Material	ABS
Power consumption	5,3 A
Voltage	220V - 240V
Electrical isolation	Class II
Protection index against ingress of dust and water	IP52
Motor power	1200 W
Motor speed	32000 RPM
Drying time	14-15 seconds
HEPA filter	YES
SOAP DISPENSER	
Soap dispenser dimensions	120 x 322 x 120 mm
Weight	0,9 kg
Materials	ABS
Voltage	5V
Soap dosage	1-4cc (electronic regulation)
Soap tank capacity	2 litres

01901

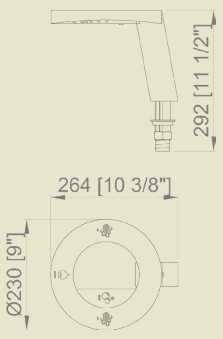

01902

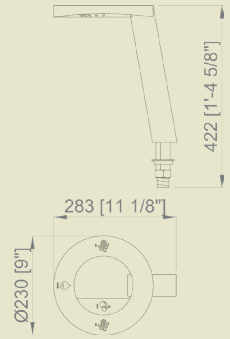

01901.S	01902.S
1490,00 €	**1490,00 €**

Finish
Silver



01901.T	01902.T
1641,00 €	**1641,00 €**

Finish
Titanium

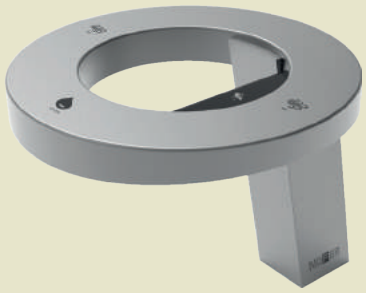

01901.BK	01902.BK
1641,00 €	**1641,00 €**

Finish
Black

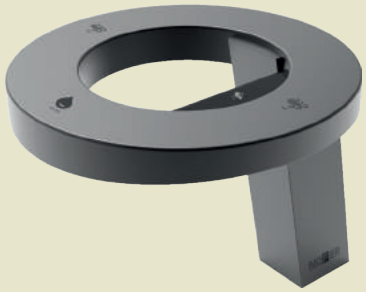

01901.GD	01902.GD
1779,00 €	**1779,00 €**

Finish
Gold

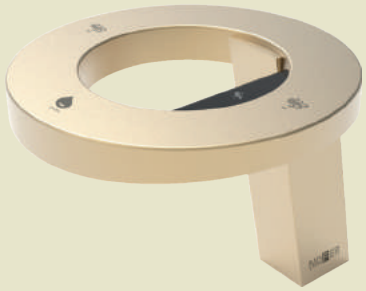

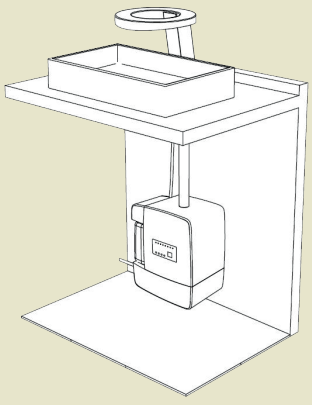

CE SGS

airtap



NOFER®

HAND DRYER WITH ELECTRONIC SENSOR

Material
Chrome-plated brass

Finish
POLISH (.B)

airtap

NEW

Hand dryer tap on countertop.
Eco-efficient, ultra fast drying time.
Made in chromed brass.

01910.B	01911.B
870,00 €	**870,00 €**



01910

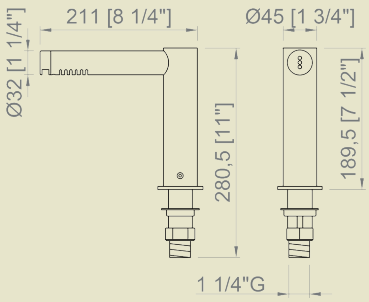

Automatic soap dispenser

03106.B
379,55 €



Automatic faucet

07250.B
557,50 €



01911

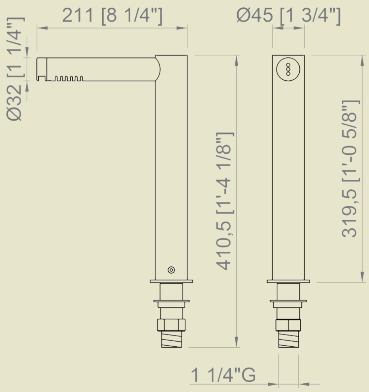



CE SGS

GENERAL CHARACTERISTICS	
Dimensions 01910.B	189,5 x 45 x 211 mm
Dimensions 01911.B	319,5 x 45 x 211 mm
Casing thickness	1,2 mm
Weight	4,9 Kg
Operation	Electronic sensor
Voltage	220 - 240 V~
Frequency	50 - 60 Hz
Power consumption	3,5 A
Electrical isolation	Class I
Protection index against ingress of dust and water	IPX1
Automatic stop for vandalism	YES

MOTOR	
Power	800 W
Speed	35000 rpm
Type	Universal
Electrical protection	Safety heat limiter
BENEFITS	
Air temperature (20ºC ambient)	40ºC a 10 cm
Airspeed	305 Km/h
Estimated drying time	10-12 seconds
Noise level at 2m	72 dbA

fuga evo



NOFER

HAND DRYER WITH ELECTRONIC SENSOR

fuga evo

NEW

3 YEARS OF WARRANTY

Ultra fast drying. Eco-efficient, compact design and minimal thickness. Activated by sensor. Available in four finishings: satin, polish, white and ABS.



01831.S

295,00 €

Material
AISI 304 stainless steel

Finish
Satin

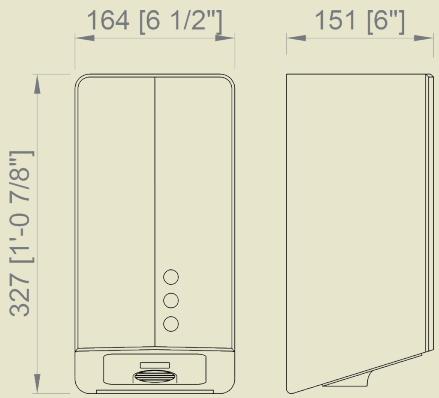



01831.B

299,00 €

Material
AISI 304 stainless steel

Finish
Polish

01831.N

507,79 €

OTHER COLORS

609,35 €

GENERAL CHARACTERISTICS	
Dimensions	327 x 164 x 151 mm
Weight	4,7 Kg
Operation	Electronic sensor
Voltage	220 - 240 V~
Frequency	50 - 60 Hz
Power consumption	3,5 A
Electrical isolation	Class I
Protection index against ingress of dust and water	IPX1
Automatic stop for vandalism	YES

MOTOR	
Power	800 W
Speed	35000 rpm
Type	Universal
Electrical protection	Safety heat limiter
BENEFITS	
Air temperature (20ºC ambient)	40ºC a 10 cm
Airspeed	305 Km/h
Estimated drying time	10-12 seconds
Noise level at 2m	72 dbA

fuga



NOFER

2 YEARS OF WARRANTY

fuga

Ultra fast drying. Eco-efficient, compact design and minimal thickness. Activated by sensor. Available in four finishings: satin, polish, white and ABS.

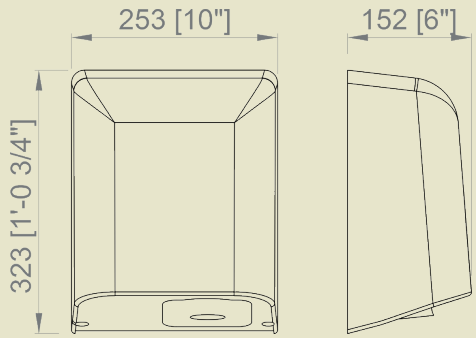

GENERAL CHARACTERISTICS	
Dimensions	323 x 253 x 152 mm
Dimensions (only 01861.W)	325 x 255 x 152 mm
Casing thickness	1,2 mm (ABS 3 mm)
Weight (only 01861.W)	4,9 Kg (3,6 Kg)
Power	800 W
Operation	Electronic sensor
Voltage	220 - 240 V~
Frequency	50 - 60 Hz
Power consumption	3,5 A
Electrical isolation	Class I
Index protection against ingress of dust and water	IPX1
Automatic stop for vandalism	YES
MOTOR	
Power	800 W
Speed	35000 rpm
Type	Universal
Electrical protection	Safety heat limiter
BENEFITS	
Air temperature (20ºC ambient)	40ºC a 10 cm
Airspeed	305 Km/h
Estimated drying time	10-12 seconds
Noise level at 2m	72 dbA

01851.S

308,00 €

Material
AISI 304 stainless steel

Finish
Satin



01851.B

319,00 €

Material
AISI 304 stainless steel

Finish
Polish



01851.W

265,00 €

Material
Steel

Finish
White



01861.W

222,50 €

Material
ABS

Finish
White



fusion



NOFER®

Fusion

fusion NEW

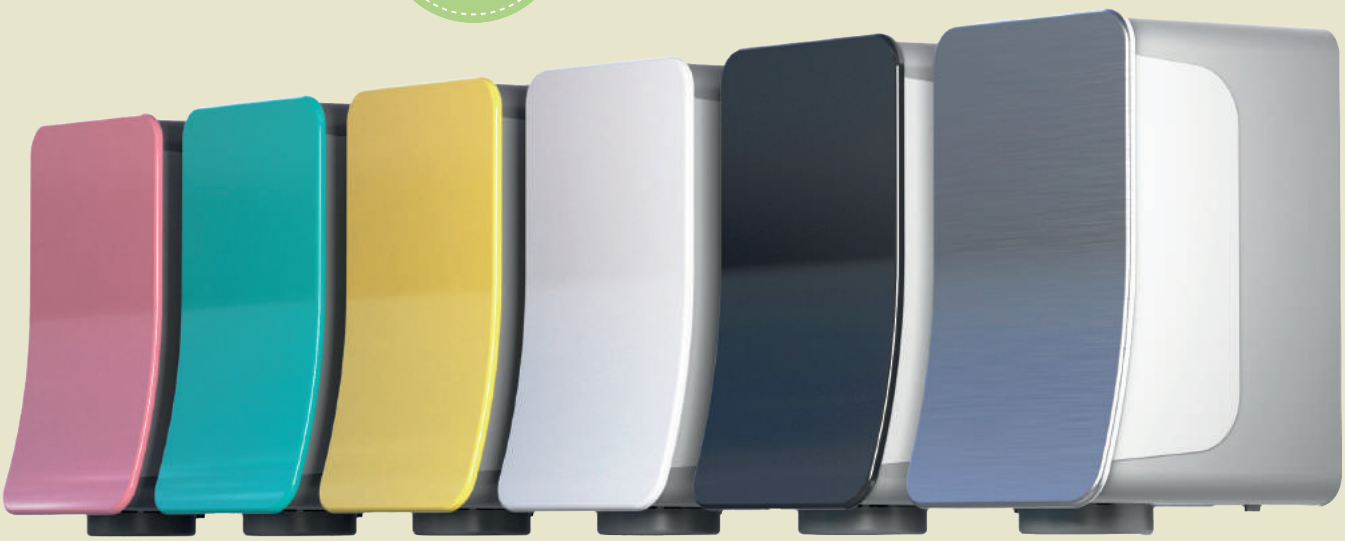

01871.PK	01871.TQ	01871.YL	01871.W	01871.BK	01871.G
Consult	Consult	Consult	Consult	Consult	Consult

Each device is equipped with the two interchangeable outlets:



MULTIJET

The blade air outlet is designed for a quick and effective drying.

The patented Acoustic Cushioning system uses an air outlet consisting of inverted cone shaped holes which limit the sound level to maintain a silent environment.



BLADE

The blade air outlet is designed for a quick and effective drying.

WITH FILTER AND GEL

ZeroSmell to avoid bad odours and Hepa filter to clean the air

SOUND LEVEL

65 dbA with the multi-jet technology and eco mode

HIGH ENERGY EFFICIENCY

Environmentally friendly

LOW POWER

900 W turbo mode
700 W eco mode

v-jet



NOFER®

v-jet

veltia
New Generation Hand Dryers

NOFER®

3 YEARS
OF WARRANTY
Extendable to 5 years.
To be consulted





V300

The V300 hand dryer has an anti-splash drying system by high speed air currents. No need to insert the hands one and again. How to use: enter the hands in the drying area, wait for few seconds and take the dry hands out.



TRIBLADE

Ultra fast drying system by high velocity air currents.

How to use: insert your hands in the drying area, moving them up and down.

PROTECTION THAT LIVES ON MICROBAN ZeroSmell

CE ADA COMPLIANT

HAND DRYER WITH ELECTRONIC SENSOR

ION SHIELD
ion technology





ION SHIELD

The application of the Ion-Shield technology to hand dryers is one of the most revolutionary developments in the industry in recent times. And Veltia is the first company to incorporate this technology. This technology not only improves the hygiene of hands' drying but it also acts as a cleaner and purifier of the air in the bathroom or the space where it is located.

With Ion-Shield, the dryer emits 20 million negative ions per cm3. These ions attract the particles of dirt and pollution. Then they stick together and fell down by the effect of gravity.

With this system, we clean the air of bacteria, mites, and bad odors, resulting in a cleaner and more pleasant environment.

HEPA FILTER 90725

The HEPA filters H12 are composed of a mesh with a diameter of between 0.5 and 2 micrometers. This type of filter is designed to retain the smallest pollutants and particles, thereby improving the efficiency in the elimination of most of the contaminant residues. Veltia's H12 HEPA filters are positioned as one of the main and most effective air filters on the market thanks to its high efficiency and effectiveness in removing quickly up to 99.50% of polluting particles in suspension.

ZERO SMELL 06035

ZeroSmell not only neutralizes bad odours within the surrounding area, but leaves a slight and pleasant fragrance which increases the user's experience and perception

ZeroSmell is an innovative product that can be used to remove bad odours. With the maximum level of efficiency in areas where bad smells are usually present in both domestic and professional environments.

Currently, there is no other product on the market as effective as ZeroSmell. Most other products are usually air fresheners that only cover the bad smell with perfumes. They claim to eliminate bad odours when they actually only cover them.

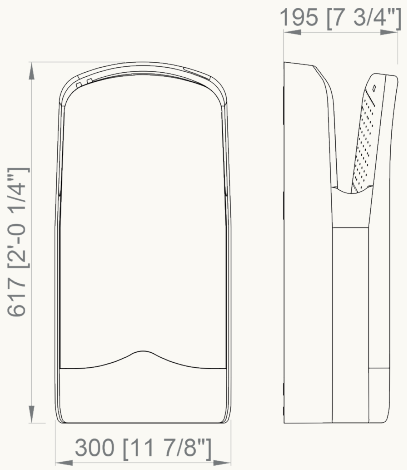

GENERAL CHARACTERISTICS	
Dimensions	617 x 300 x 195 mm
Weight	9,55 Kg
Power	1760 W
Operation	Electronic sensor
Voltage	220 - 230 - 240 V-
Frequency	50 - 60 Hz
Power consumption	8 A
Electrical isolation	Class II
Protection index against ingress of dust and water	IPX1
Automatic stop for vandalism	YES

MOTOR	
Power	1760 W
Speed	30000 rpm
Type	Universal
Electrical protection	Safety heat limiter
BENEFITS	
Airspeed	340 Km/h
Estimated drying time	6-8 seconds
Noise level at 2m	70 dbA

HAND DRYER WITH ELECTRONIC SENSOR

veltia
New Generation Hand Dryers

NOFER

Hepa	Yes				No (optional)			
Zero Smell	Yes				No (optional)			
Model	V300		Triblade		V300		Triblade	
Ion Shield	Yes	No	Yes	No	Yes	No	Yes	No
	01304.IW	01304.W	01306.IW	01306.W	01303.IW	01303.W	01305.IW	01305.W
	1120,00 €	**852,00 €**	**1100,00 €**	**852,00 €**	**995,00 €**	**699,00 €**	**995,00 €**	**699,00 €**
	01304.IS	01304.S	01306.IS	01306.S	01303.IS	01303.S	01305.IS	01305.S
	1280,00 €	**1022,00 €**	**1280,00 €**	**1022,00 €**	**1135,00 €**	**805,00 €**	**1135,00 €**	**789,00 €**
	01304.ICH	01304.CH	01306.ICH	01306.CH	01303.ICH	01303.CH	01305.ICH	01305.CH
	1300,00 €	**1100,00 €**	**1300,00 €**	**1100,00 €**	**1195,00 €**	**995,00 €**	**1195,00 €**	**995,00 €**
	01304.IBK	01304.BK	01306.IBK	01306.BK	01303.IBK	01303.BK	01305.IBK	01305.BK
	1300,00 €	**1100,00 €**	**1300,00 €**	**1100,00 €**	**1195,00 €**	**995,00 €**	**1195,00 €**	**995,00 €**
	01304.IDB	01304.DB	01306.IDB	01306.DB	01303.IDB	01303.DB	01305.IDB	01305.DB
	1300,00 €	**1100,00 €**	**1300,00 €**	**1100,00 €**	**1195,00 €**	**995,00 €**	**1195,00 €**	**995,00 €**
	01304.IAB	01304.AB	01306.IAB	01306.AB	01303.IAB	01303.AB	01305.IAB	01305.AB
	1300,00 €	**1100,00 €**	**1300,00 €**	**1100,00 €**	**1195,00 €**	**995,00 €**	**1195,00 €**	**995,00 €**
	01304.IRF	01304.RF	01306.IRF	01306.RF	01303.IRF	01303.RF	01305.IRF	01305.RF
	1300,00 €	**1100,00 €**	**1300,00 €**	**1100,00 €**	**1195,00 €**	**995,00 €**	**1195,00 €**	**995,00 €**
	01304.ICR	01304.CR	01306.ICR	01306.CR	01303.ICR	01303.CR	01305.ICR	01305.CR
	1300,00 €	**1100,00 €**	**1300,00 €**	**1100,00 €**	**1195,00 €**	**995,00 €**	**1195,00 €**	**995,00 €**
	01304.IBD	01304.BD	01306.IBD	01306.BD	01303.IBD	01303.BD	01305.IBD	01305.BD
	1300,00 €	**1100,00 €**	**1300,00 €**	**1100,00 €**	**1195,00 €**	**995,00 €**	**1195,00 €**	**995,00 €**

Durability

- AISI 304 **stainless steel** quality casings of thickness up to 1,5mm.
- Compact and sturdy designs with **security systems** against manipulation.
- **Automatic stop** caused by vandalism.
- **High resistance components and high resistance to continued use** for the equipment of buildings with high frequency of use such as airports, shopping malls, public buildings, etc.




NOFER®

windflow



NOFER

HAND DRYER WITH ELECTRONIC SENSOR

Material
AISI 304 stainless steel

Finish
SATIN (.S)
POLISH (.B)
WHITE (.W)

windflow

3 YEARS OF WARRANTY

01151.S
360,00 €



Automatic activation hand dryer with design casing. Long Life motor which increases the average life of the device.

Available finishes: satin, polish and white.

01151.B
375,00 €



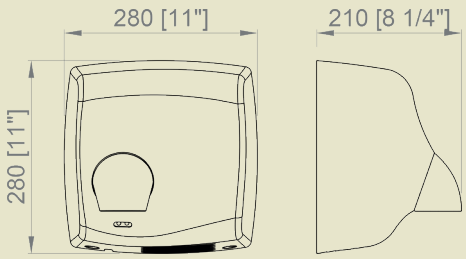

01151.W
333,00 €

Material
Steel



GENERAL CHARACTERISTICS	
Dimensions	280 x 280 x 210 mm
Casing thickness	1,5 mm
Weight	5,8 Kg
Power	2450 W
Operation	Electronic sensor
Voltage	220 - 240 V~
Frequency	50 - 60 Hz
Power consumption	10,6 A
Electrical isolation	Class I
Protection index against ingress of dust and water	IPX1
Automatic stop for vandalism	YES

MOTOR	
Power	250 W
Speed	6500 rpm
Type	Universal
Electrical protection	Safety heat limiter
BENEFITS	
Air temperature (20ºC ambient)	53ºC a 10 cm
Airspeed	117 Km/h
Estimated drying time	28 seconds
Noise level at 2m	70 dbA

cyclon



NOFER®

HAND DRYER WITH PUSH BUTTON

Material
AISI 304 stainless steel

Finish
SATIN (.S)
POLISH (.B)
WHITE (.W)

cyclon

2 YEARS OF WARRANTY

01100.S
334,00 €



Robust and vandalproof, a classic for all kind of environments. Long Life motor which increases the average life of the device.

Available finishes: satin, polish and white.

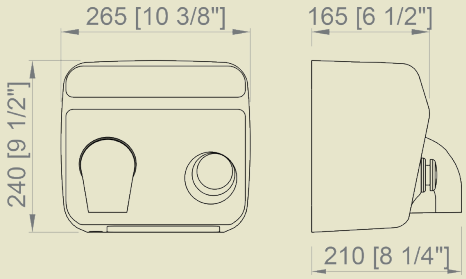

01100.B
334,00 €



01100.W
291,00 €



GENERAL CHARACTERISTICS	
Dimensions	240 x 265 x 210 mm
Casing thickness	1,5 mm / 1,2 mm
Weight	5,5 Kg
Power	2450 W
Operation	Push button
Voltage	220 - 240 V~
Frequency	50 - 60 Hz
Power consumption	10,6 A
Electrical isolation	Class I
Protection index against ingress of dust and water	IPX1
Automatic stop for vandalism	YES

MOTOR	
Power	250 W
Speed	6500 rpm
Type	Universal
Electrical protection	Safety heat limiter
BENEFITS	
Air temperature (20ºC ambient)	53ºC a 10 cm
Airspeed	117 Km/h
Estimated drying time	28 seconds
Noise level at 2m	70 dbA

cyclon



NOFER®

HAND DRYER WITH ELECTRONIC SENSOR

Material
AISI 304 stainless steel

Finish
SATIN (.S)
POLISH (.B)
WHITE (.W)

cyclon

2 YEARS OF WARRANTY

01101.S
341,00 €



Robust and vandalproof, a classic for all kind of environments. Long Life motor which increases the average life of the device.

Available finishes: satin, polish and white.

01101.B
341,00 €



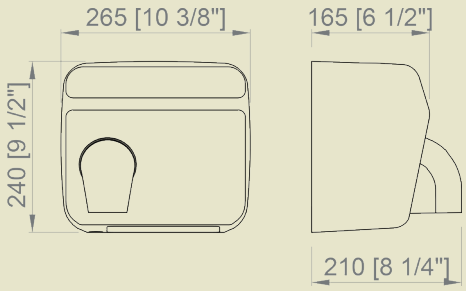

01101.W
294,00 €



GENERAL CHARACTERISTICS	
Dimensions	240 x 265 x 210 mm
Casing thickness	1,5 mm / 1,2 mm
Weight	5,5 Kg
Power	2450 W
Operation	Electronic sensor
Voltage	220 - 240 V~
Frequency	50 - 60 Hz
Power consumption	10,6 A
Electrical isolation	Class I
Protection index against ingress of dust and water	IPX1
Automatic stop for vandalism	YES

MOTOR	
Power	250 W
Speed	6500 rpm
Type	Universal
Electrical protection	Safety heat limiter
BENEFITS	
Air temperature (20ºC ambient)	53ºC a 10 cm
Airspeed	117 Km/h
Estimated drying time	28 seconds
Noise level at 2m	70 dbA

thin



NOFER®

Material
AISI 304 stainless steel

Finish
SATIN (.S)
POLISH (.B)
WHITE (.W)

thin

2 YEARS
OF WARRANTY

01600.S
324,00 €



Minimum depth to equip adapted environments, heavy duty and automatic activation.

Available finishes: satin, polish and white.

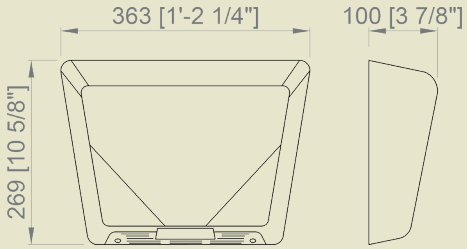

01600.B
324,00 €



ADA COMPLIANT



01600.W
318,00 €



GENERAL CHARACTERISTICS	
Dimensions	296 x 363 x 100 mm
Casing thickness	1,2 mm
Weight	4 Kg
Power	2350 W
Operation	Electronic sensor
Voltage	220 - 240 V~
Frequency	50 - 60 Hz
Power consumption	9,56 A
Electrical isolation	Class I
Protection index against ingress of dust and water	IPX1
Automatic stop for vandalism	YES

MOTOR	
Power	250 W
Speed	8300 rpm
Type	Universal
Electrical protection	Safety heat limiter
BENEFITS	
Air temperature (20ºC ambient)	39ºC a 10 cm
Airspeed	90 Km/h
Estimated drying time	33 seconds
Noise level at 2m	69 dbA

Price & Quality

· Classic design with **Long Life motor** and standard drying times.

· Stainless steel and ABS versions available with **push button or sensor**.

· **Optimal qualitiy / price ratio.**

· **Vandal-proof.**




NOFER®

kai



NOFER

HAND DRYER WITH PUSH BUTTON

Material
AISI 304 stainless steel

Finish
SATIN (.S)
POLISH (.B)
WHITE (.W)

kai

2 YEARS
OF WARRANTY

01250.S
198,50 €



Push button activated hand dryer, classic design available in three finishes: satin, polish and white.

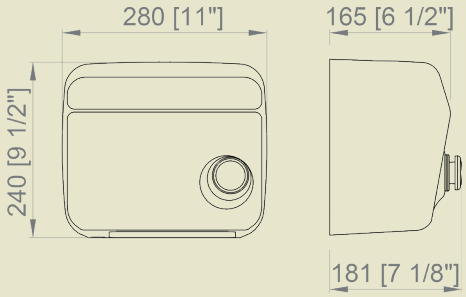

01250.B
198,50 €



01250.W
189,50 €

Material
Steel



GENERAL CHARACTERISTICS	
Dimensions	240 x 280 x 165 mm
Casing thickness	1,00 mm
Weight	3,5 Kg
Power	1500 W
Operation	Pulsador
Voltage	220 - 240 V~
Frequency	50 - 60 Hz
Power consumption	6,6 A
Electrical isolation	Class II
Protection index against ingress of dust and water	IPX1
Automatic stop for vandalism	YES

MOTOR	
Power	110 W
Speed	2800 rpm
Type	Sin escobillas
Electrical protection	Safety heat limiter
BENEFITS	
Air temperature (20ºC ambient)	50ºC
Airspeed	65 Km/h
Estimated drying time	40 seconds
Noise level at 2m	60 dbA

kai



NOFER

HAND DRYER WITH ELECTRONIC SENSOR

Material
AISI 304 stainless steel

Finish
SATIN (.S)
POLISH (.B)
WHITE (.W)

kai

2 YEARS
OF WARRANTY

01251.S
195,00 €



Automatic sensor activated hand dryer, classic design available in three finishes: satin, polish and white.

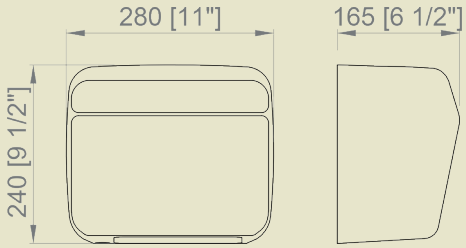

01251.B
195,00 €



01251.W
179,00 €

Material
Steel



GENERAL CHARACTERISTICS	
Dimensions	240 x 280 x 165 mm
Casing thickness	1,00 mm
Weight	3,5 Kg
Power	1500 W
Operation	Electronic sensor
Voltage	220 - 240 V~
Frequency	50 - 60 Hz
Power consumption	6,6 A
Electrical isolation	Class II
Protection index against ingress of dust and water	IPX1
Automatic stop for vandalism	YES

MOTOR	
Power	110 W
Speed	2800 rpm
Type	Sin escobillas
Electrical protection	Safety heat limiter
BENEFITS	
Air temperature (20ºC ambient)	50ºC
Airspeed	65 Km/h
Estimated drying time	40 seconds
Noise level at 2m	60 dbA

bigflow evo



NOFER®

HAND DRYER WITH ELECTRONIC SENSOR

bigflow evo

NEW

evo

2 YEARS OF WARRANTY

Automatic sensor activated hand dryer. Selectable power by switch. Compact design and minimum depth. Four finishes available: satin, polish, white and ABS.

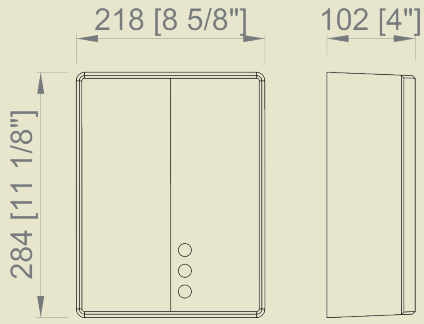

ADA COMPLIANT

GENERAL CHARACTERISTICS	
Dimensions	284 x 218 x 102 mm
Casing thickness	1,2 mm (ABS 3 mm)
Weight	3,9 Kg
Weight (only 01461.W)	2,6 Kg
Power	2050 W / 1200 W (optional)
Operation	Electronic sensor
Voltage	220 - 240 V-
Frequency	50 - 60 Hz
Power consumption	9 A
Electrical isolation	Class II
Index protection against ingress of dust and water	IPX1
Automatic stop for vandalism	YES
MOTOR	
Power	110 W
Speed	2800 rpm
Type	Sin escobillas
Electrical protection	Safety heat limiter
BENEFITS	
Air temperature (ambient 20ºC)	60ºC
Airspeed	65 Km/h
Estimated drying time	40 seconds
Noise level at 2m	60 dbA

01481.S

207,00 €

Material
AISI 304 stainless steel

Finish
Satin



01481.B

207,00 €

Material
AISI 304 stainless steel

Finish
Polish



01481.W

170,00 €

Material
Steel

Finish
White



01491.W

115,00 €

Material
ABS

Finish
White



01481.N

380,00 €

OTHER COLORS

456,00 €

bigflow



NOFER

HAND DRYER WITH PUSH BUTTON

bigflow NEW

2 YEARS OF WARRANTY

Push button activated hand dryer. Brusheless motor. Four finishes available: satin, polish, white and ABS.

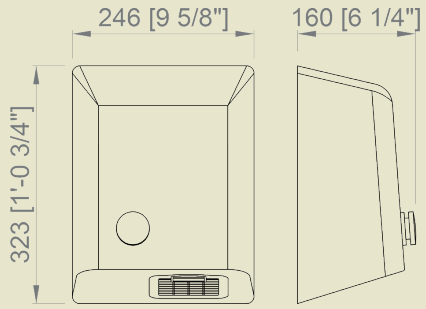

GENERAL CHARACTERISTICS	
Dimensions	323 x 246 x 160 mm
Dimensions (only 01460.W)	325 x 255 x 165 mm
Casing thickness	1,2 mm (ABS 3 mm)
Weight	3,9 Kg
Weight (only 01460.W)	2,6 Kg
Power	2050 W
Operation	Pulsador
Voltage	220 - 240 V-
Frequency	50 - 60 Hz
Power consumption	9 A
Electrical isolation	Class II
Index protection against ingress of dust and water	IPX1
Automatic stop for vandalism	YES
MOTOR	
Power	110 W
Speed	2800 rpm
Type	Sin escobillas
Electrical protection	Safety heat limiter
BENEFITS	
Air temperature (20ºC ambient)	60ºC
Airspeed	65 Km/h
Estimated drying time	40 seconds
Noise level at 2m	60 dbA

01450.S

235,00 €

Material
AISI 304 stainless steel

Finish
Satin



01450.B

235,00 €

Material
AISI 304 stainless steel

Finish
Polish



01450.W

195,00 €

Material
Steel

Finish
White



01460.W

156,00 €

Material
ABS

Finish
White



bigflow



NOFER

bigflow

2 YEARS OF WARRANTY

Automatic sensor activated hand dryer. Brusheless motor. Four finishes available: satin, polish, white and ABS.

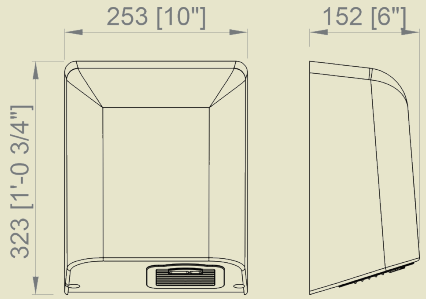

GENERAL CHARACTERISTICS	
Dimensions	323 x 253 x 152 mm
Dimensions (only 01461.W)	325 x 255 x 152 mm
Casing thickness	1,2 mm (ABS 3 mm)
Weight	3,9 Kg
Weight (only 01461.W)	2,6 Kg
Power	2050 W
Operation	Electronic sensor
Voltage	220 - 240 V-
Frequency	50 - 60 Hz
Power consumption	9 A
Electrical isolation	Class II
Index protection against ingress of dust and water	IPX1
Automatic stop for vandalism	YES
MOTOR	
Power	110 W
Speed	2800 rpm
Type	Sin escobillas
Electrical protection	Safety heat limiter
BENEFITS	
Air temperature (20ºC ambient)	60ºC
Airspeed	65 Km/h
Estimated drying time	40 seconds
Noise level at 2m	60 dbA

01451.S

235,00 €

Material
AISI 304 stainless steel

Finish
Satin



01451.B

235,00 €

Material
AISI 304 stainless steel

Finish
Polish



01451.W

195,50 €

Material
Steel

Finish
White



01461.W

156,00 €

Material
ABS

Finish
White



compact



NOFER®

COMPACT FURNITURE WITH HAND DRYER

Material
AISI 304 stainless steel

Finish
SATIN (.S)



12017.ADO.S

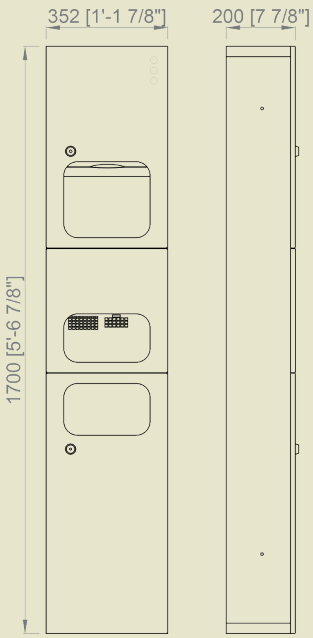

12017.P.S + 12017.ADO.S

12017.ADO.S

310,00 €

Kit for surface mounted installation of compact furnitures 12017.P.S and 12019.P.S.



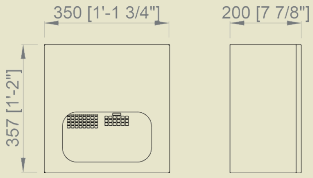

12017.HD.S

463,00 €

Flush mounted compact unit with Kai hand dryer



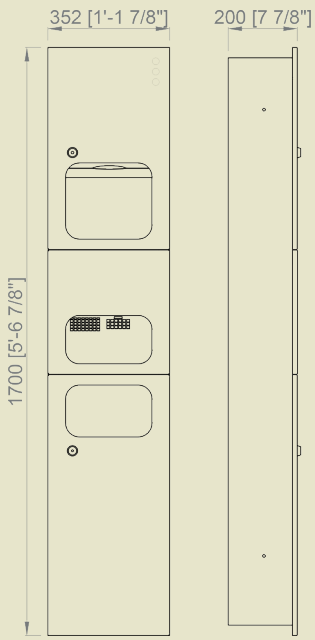

12017.P.S

1005,00 €

Flush mounted compact furniture with Kai hand dryer, towel paper dispenser and bin

Towel paper dispenser capacity
300 - 500 uses

Bin capacity
18 litres

GENERAL CHARACTERISTICS	
Dimensions	1700 x 352 x 200 mm
Rough wall opening dimensions	1650 x 300 x 195 mm
Power total	
Operation	Electronic sensor
Voltage	220 - 240 V-
Frequency	50 - 60 Hz
Power consumption	6,6 A
Electrical isolation	Class II
Protection index against ingress of dust and water	IPX1
Automatic stop for vandalism	YES
MOTOR	
Power	110 W
Speed	2800 rpm
Type	Sin escobillas
Electrical protection	Safety heat limiter
BENEFITS	
Air temperature (20ºC ambient)	50ºC
Airspeed	65 Km/h
Estimated drying time	40 seconds
Noise level at 2m	60 dbA

COMPACT FURNITURE WITH HAND DRYER

Material
AISI 304 stainless steel

Finish
SATIN (.S)



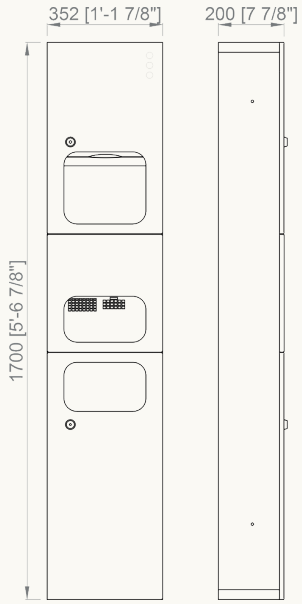

12019.P.S + 12017.ADO.S

12017.ADO.S

310,00 €

Kit for surface mounted installation of compact furnitures 12017.P.S and 12019.P.S.



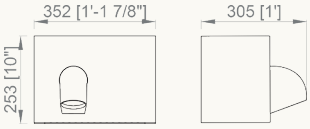

12019.HD.S

520,00 €

Flush mounted compact unit with Cyclon hand dryer



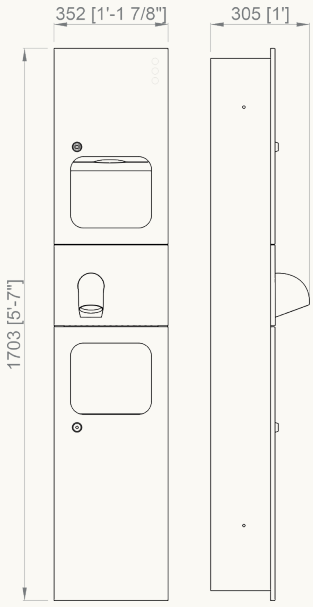

12019.P.S

1018,00 €

Flush mounted compact furniture with Cyclon hand dryer, towel paper dispenser and bin

Towel paper dispenser capacity
400 - 600 uses

Bin capacity
25,5 litres

GENERAL CHARACTERISTICS	
Dimensions	1700 x 352 x 200 mm
Rough wall opening dimensions	1650 x 300 x 195 mm
Power	2450 W
Operation	Electronic sensor
Voltage	220 - 240 V~
Frequency	50 - 60 Hz
Power consumption	10,6 A
Electrical isolation	Class I
Protection index against ingress of dust and water	IPX1
Automatic stop for vandalism	YES
MOTOR	
Power	250 W
Speed	6500 rpm
Type	Universal
Electrical protection	Safety heat limiter
BENEFITS	
Air temperature (20ºC ambient)	53ºC a 10 cm
Airspeed	117 Km/h
Estimated drying time	28 seconds
Noise level at 2m	70 dbA

COMPACT FURNITURE WITH HAND DRYER

NEW

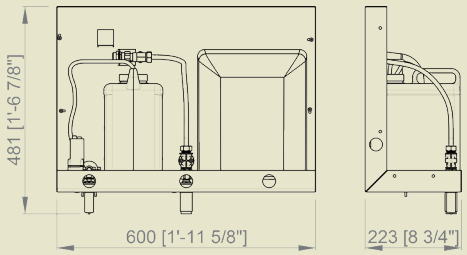

Compact furniture for installation behind the mirror. Designed for multifunction: automatic hand dryer, sensor tap and automatic soap dispenser. Stainless steel frame. Consult availability. Consult other options.

Dimensions
430 x 600 x 223 mm
Consult other dimensions



Equiped with:

12053.FMS	12053.MS	12053.FS	12053.FTS	12053.TS
1688,00 €	**1408,00 €**	**911,00 €**	**1456,00 €**	**1176,00 €**
Fuga hand dryer, thermostatic tap and soap dispenser	Thermostatic tap and soap dispenser	Fuga hand dryer and soap dispenser	Fuga hand dryer, tap and soap dispenser	Tap and soap dispenser

NEW

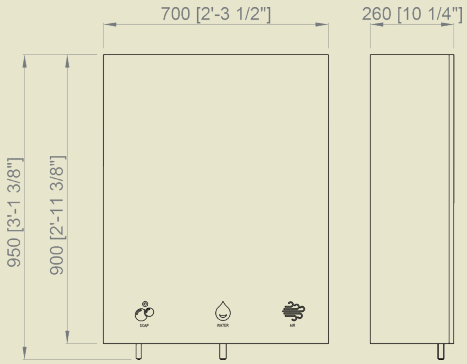

Compact furniture with inspectable mirrored cabinet. Designed for multifunction: automatic hand dryer, sensor tap and automatic soap dispenser. Stainless steel frame and plywood cabinet. Consult availability. Consult other options.

Dimensions
950 x 700 x 260 mm
Consult other dimensions



Equiped with:

12054.FMS	12054.MS	12054.FS	12054.FTS	12054.TS
2778,00 €	**2499,00 €**	**2001,00 €**	**2546,00 €**	**2267,00 €**
Bigflow hand dryer, thermostatic tap and soap dispenser	Thermostatic tap and soap dispenser	Bigflow hand dryer and soap dispenser	Bigflow hand dryer, tap and soap dispenser	Tap and soap dispenser

	WINDFLOW	CYCLON	THIN	KAI	BIGFLOW	BIGFLOW EVO	VELTIA V-JET	VELTIA TRIBLADE V-JETTRIBLADE	FUGA	FUGA EVO	AIRTAP	CONCEPT[3]
GENERAL CHARACTERISTICS												
Operation	Electronic sensor	Sensor / Button	Electronic sensor	Sensor / Button	Sensor / Button	Electronic sensor	Electronic sensor	Electronic sensor	Electronic sensor	Electronic sensor	Electronic sensor	
Voltage	220 - 240 V~	220 - 240 V~	220 - 240 V~	220 - 240 V~	220 - 240 V~	220 - 240 V~	220 - 230 - 240 V~	220 - 230 - 240 V~	220 - 240 V~	220 - 240 V~	220 - 240 V~	220 - 240 V~
Frequency	50 - 60 Hz	50 - 60 Hz	50 - 60Hz	50 - 60 Hz	50 - 60 Hz	50 - 60 Hz	50 - 60 Hz	50 - 60 Hz	50 - 60 Hz	50 - 60 Hz	50 - 60 Hz	50 - 60 Hz
Power	2450 W	2450 W	2350 W	1500 W	2050 W	2050 W	1760 W	1760 W	800 W	800 W	800 W	
Power consumption	10,6 A	10,6 A	9,56 A	6,6 A	9 A	9 A	8 A	8 A	3,5 A	3,5 A	3,5 A	5,3 A
Electrical isolation	Class I	Class I	Class I	Class II	Class II	Class II	Class II	Class II	Class I	Class I	Class I	Class II
Index protection against ingress of dust and water	IPX1	IPX1	IPX1	IPX1	IPX1	IPX1	IPX1	IPX1	IPX1	IPX1	IPX1	IP52
Adjustable time button	-	de 10 a 90 s	-	de 10 a 90 s	de 10 a 90 s	-	-	-	-	-	-	-
Automatic stop vandalism	YES	YES	YES	YES	YES	YES	YES	YES	YES	YES	YES	
Adjustable sensor sensitivity	from 10 to 50 cm	from 10 to 50 cm	from 10 to 50 cm	from 10 to 50 cm	from 10 to 50 cm	from 10 to 50 cm	-	-	from 10 to 50 cm	from 10 to 50 cm	from 10 to 50 cm	
MOTOR												
Power	250 W	250 W	250 W	110 W	110 W	110 W	1760 W	1760 W	800 W	800 W	800 W	1200W
Speed	6500 rpm	6500 rpm	8300 rpm	2800 RPM	2800 RPM	2800 RPM	30000 rpm	30000 rpm	35000 rpm	35000 rpm	35000 rpm	32000 rpm
Type	Universal	Universal	Universal	Sin escobillas	Sin escobillas	Sin escobillas	Universal	Universal	Universal	Universal	Universal	
Elecrical protection	Safety heat limiter	Safety heat limiter	Safety heat limiter	Safety heat limiter	Safety heat limiter	Safety heat limiter	Safety heat limiter	Safety heat limiter	Safety heat limiter	Safety heat limiter	Safety heat limiter	
RESISTENCIA												
Power	2200 W	2200 W	2100 W	1350 W	1840 W	1840 W / 1540	-	-	-	-	-	
Thread	Ni-Crom	Ni-Crom	Ni-Crom	Ni-Crom	Ni-Crom	Ni-Crom	-	-	-	-	-	
Type	Spiral	Spiral	Spiral	Spiral	Spiral	lámina	-	-	-	-	-	
Support	Ceramic	Ceramic	Ceramic	mica	mica	mica	-	-	-	-	-	
Elecrical protection	Safety heat limiter	Safety heat limiter	Safety heat limiter	Safety heat limiter	Safety heat limiter	Safety heat limiter	-	-	-	-	-	
CASING												
Material	AISI 304 stainless steel / Painted steel	AISI 304 stainless steel / Painted steel	AISI 304 stainless steel	AISI 304 stainless steel / Painted steel	AISI 304 stainless steel / Painted steel / ABS	AISI 304 stainless steel / Painted steel / ABS	ABS	ABS	AISI 304 stainless steel / Painted steel / ABS	AISI 304 stainless steel	Chrome-plated brass	Chrome-plated brass
Finish	Satin - Polish - White	Satin - Polish - White	Satin - Polish - White	Satin - Polish - White	Satin - Polish - White	Satin - Polish - White	Available in colors	Available in colors	Satin - Polish - White	Satin - Polish	Polish	Polish
Thickness	1,5 / 1,2 mm	1,5 / 1,2 mm	1,2 mm	1 mm	1,2 mm (ABS 3 mm)	1,2 mm (ABS 3 mm)	-	-	1,2 mm (ABS 3 mm)	1,2 mm	-	
DIMENSIONS												
Height x Width x Depth (mm)	280 x 250 x 203	280 x 250 x 203	265 x 270 x 100	280 x 250 x 168	323 x 253 x 152 325 x 255 x 152 (ABS)		617 x 300 x 195	617 x 300 x 195	323 x 253 x 152 325 x 255 x 152 (ABS)			
Weight	5,8 Kg	5,5 Kg	4,0 Kg	3,5 Kg	(ABS 2,6 KG) 3,9 Kg		9,55 kg	9,55 kg	(ABS 3,6 KG) 4,9 Kg			
BENEFITS												
Air temperature (20ºC ambient)	53ºC at 10 cm	53ºC at 10 cm	39ºC at 10 cm	50ºC	60ºC	60ºC	-	-	40ºC at 10 cm	40ºC at 10 cm	40ºC at 10 cm	
Effective flow	5500 l/min	5500 l/min	2400 l/min	2300 l/m	2300 l/m	2300 l/m	3600 l/min	4650 l/min	2660 l/min	2660 l/min	2660 l/min	
Airspeed	117 Km/h	117 Km/h	90 Km/h	65 Km/h	65 Km/h	65 Km/h	370 Km/h	340 Km/h	305 Km/h	305 Km/h	305 Km/h	
Estimated drying time	28 s	28 s	33 s	40 s	40 s	40 s	10-15 s	6-8 s	10-12 s	10-12 s	10-12 s	14-15 s
Noise level at 2 m	70 dbA	70 dbA	69 dbA	60 dbA	60 dbA	60 dbA	70 dbA	75 dbA	72 dbA	72 dbA	72 dbA	65 dbA



Evo



Tissue Evo
Paper dispenser

Fuga Evo
Hand Dryer



Inox Evo
Soap Dispenser


Bigflow Evo
Hand Dryer
Industrial Evo
Paper dispenser
Automatics Evo
Soap Dispenser

CADORES DE CABELLO - HAIRDRYERS
SÈCHE-CHEVEUX À AIR CHAUD -
CIUGACAPELLI ELETTRICI - SECADORES
CABELO - **SECADORES DE CABELLO**
AIRDRYERS - SÈCHE-CHEVEUX À AIR
AUD - ASCIUGACAPELLI ELETTRICI -
CADORES DE CABELO - SECADORES DE
BELLO - **HAIRDRYERS** - SÈCHE-CHEVEUX
IR CHAUD - ASCIUGACAPELLI ELETTRICI
ECADORES DE CABELO - SECADORES DE
BELLO - HAIRDRYERS - **SÈCHE-CHEVEUX**
IR CHAUD - ASCIUGACAPELLI ELETTRICI
ECADORES DE CABELO - SECADORES DE
BELLO - HAIRDRYERS - SÈCHE-CHEVEUX
IR CHAUD - ASCIUGACAPELLI ELETTRICI
ECADORES DE CABELO - SECADORES DE
BELLO - HAIRDRYERS - SÈCHE-CHEVEUX
IR CHAUD - ASCIUGACAPELLI ELETTRICI
ECADORES DE CABELO - SECADORES
CABELLO - HAIRDRYER SÈCHE-
EVEUX À AIR CHAUD - **ASC APELLI**
ETTRICI - SECADORES D ELO -
CADORES DE CABELLO - HA RYERS



“Variety is the soul of pleasure.”

Aphra zafra Johnston, Mrs. Behn



...regardless of their origin, race,
their customs, their limitations...

NOFER®

zonda



NOFER®

Material
AISI 304 stainless steel

Finish
SATIN (.S)
POLISH (.B)
WHITE (.W)

zonda

2 YEARS
OF WARRANTY

Push button hair dryer with nozzle. Sturdy and vandalproof for the more demanding places. Available in three finishings: satin, polish and white.

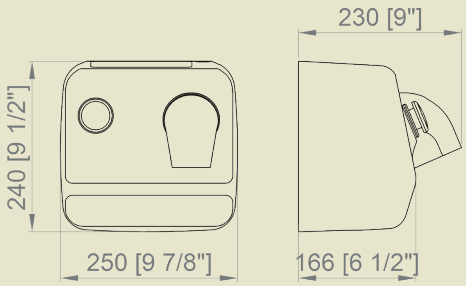

CE

02200.S
388,00 €



02200.B
388,00 €



02200.W
348,00 €



mango



NOFER

mango

2 YEARS OF WARRANTY

NEW

Push button hair dryer with hose. Consult other finishings.

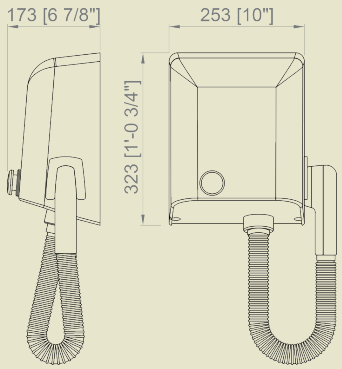



02300.S

519,00 €

Material
AISI 304 stainless steel
Chrome-plated brass complements

Finish
Satin

Dimensions
323 x 253 x 173 mm

CE

hotelline

2 YEARS OF WARRANTY

Wall mounted hair dryer.

Two speeds and switch ON / OFF.

Material
ABS

Dimensions
228 x 168 x 93 mm



02055.N

49,70 €

Finish
Black



02055.W

38,00 €

Finish
White

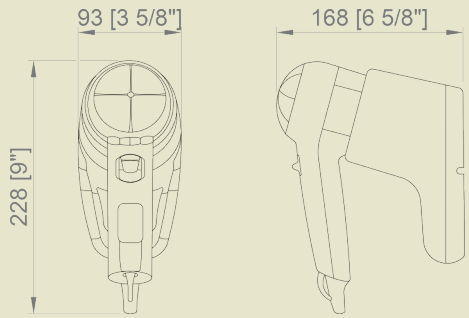



02055.G

61,70 €

Finish
Grey

CE

hotelline



NOFER®

hotelline

NEW

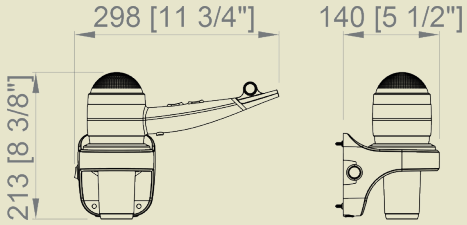

02058.S

89,30 €

With wall support holder

Material
Satin finished AISI 304 stainless steel and ABS

Dimensions
213 x 298 x 140 mm

Power
1800 - 900 W



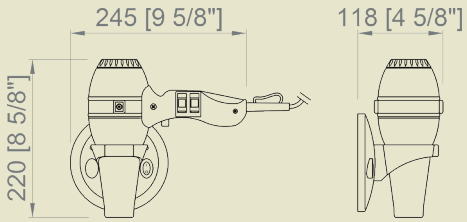

02057.B

61,00 €

With ABS hoop for wall support

Material
ABS and chromed steel

Dimensions
220 x 245 x 118 mm

Power
1800 - 900 W



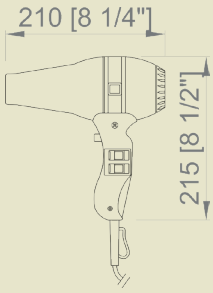

02013.B

58,40 €

Material
ABS and chromed steel

Dimensions
215 x 210 x 93 mm

Power
1800 W



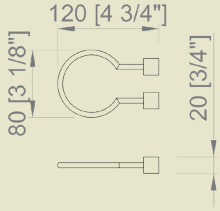

02014.B

31,10 €

Wall support holder for hair dryers

Material
Chrome-plated brass

Finish
POLISH

Dimensions
20 x 80 x 120 mm
Ø 70 mm



hotelline



02010.W

29,30 €

Foldable. With two speeds and cold shot button

Material
ABS

Finish
White

Dimensions
230 x 180 x 80 mm

Power
1600 W

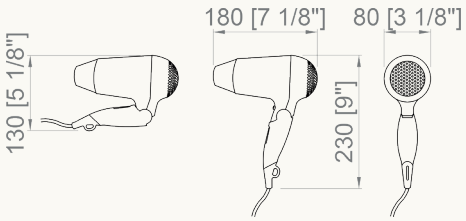



02011.W

68,80 €

Two speeds and switch ON / OFF

Material
ABS

Finish
White

Dimensions
185 x 250 x 138 mm

Power
2200 W

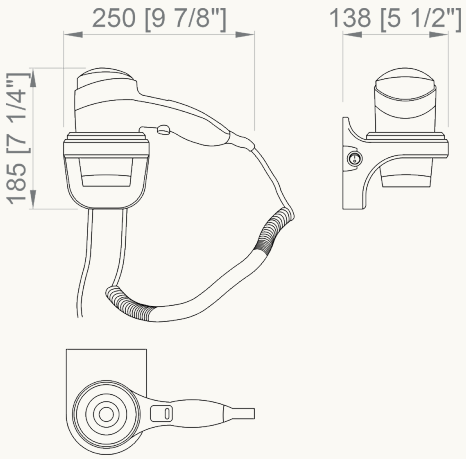



02012.W

82,00 €

Two speeds with ON/ OFF switch and socket for shavers

Material
ABS

Finish
White

Dimensions
233 x 248 x 155 mm

Power
2200 W

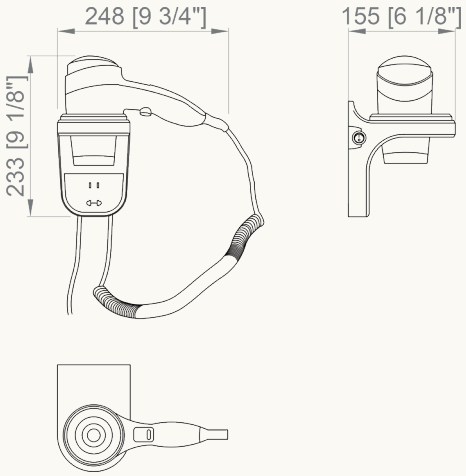

	ZONDA	02300 MANGO	02055	02010.W	02011.W	02012.W	02013	02057	02058
GENERAL CHARACTERISTICS									
Operation	Manual	Manual	Switch - Button	Manual	Switch - Button	Switch - Button	Switch - Button	Switch - Button	Switch - Button
Voltage	220 - 240 V~	220-240 V~	220-240 V~	220-240 V~	220-240 V~	220-240 V~	220-240 V~	220-240 V~	220-240 V~
Frequency	50 - 60 Hz	50 - 60 Hz	50 - 60 Hz	50 - 60 Hz	50 - 60 Hz	50 - 60 Hz	50 - 60 Hz	50 - 60 Hz	50 - 60 Hz
Power	2450 W	800 W	1200W (max) - 540W (min)	1600W	2200W (max) - 1800W (min)	2200W (max) - 1800W (min)	1800 W (max) - 900 W (min)	1800 W (max) - 900 W (min)	1800 W (max) - 900 W (min)
Power consumption	10,6 A	3,5 A	5,5 A	6,9 A	9,6 A	9,6 A	7,8 A	7.8 A	7.8 A
Electrical isolation	Class I	Class I	Class II	Class II	Class II	Class II	Class II	Class II	Class II
Electrical protection	IP23	IPX1	IP20	IP20	IP20	IP20	IP20	IP20	IP20
Push button time regulation	90 s	90 s	-	-	-	-	-	-	-
Automatic stop for vandalism	YES	YES	YES	YES	YES	YES	YES	YES	YES
MOTOR									
Power	250 W	800W	40W	40W	40W	40W	150 W	150 W	150 W
Speed	6500 RPM	35000 RPM	13000 RPM	10000 RPM	14000 RPM	14000 RPM	13000 RPM	22500 RPM	22500 rpm
Type	CA - Universal	CA - Universal	CC	CC	CC	CC	CA - Universal	CA - Universal	CA - Universal
Electrical protection	Safety heat limiter	Safety heat limiter	-	-	-	-	Safety heat limiter	Safety heat limiter	Safety heat limiter
RESISTANCE									
Power	2200 W	-	1160W	1560W	2150W	2150 W	1650 W	1650W	1650W
Wire	Ni-Crom	-	Ni-Crom	Ni-Crom	Ni-Crom	Ni-Crom	Ni-Crom	Ni-Crom	Ni-Crom
Type	Spiral	-	Wavy wire	Wavy wire	Wavy wire	Wavy wire	Wavy wire	Wavy wire	Wavy wire
Support	Ceramic	-	Mica	Mica	Mica	Mica	Mica	Mica	Mica
Electrical protection	Safety heat limiter	-	Safety heat limiter	Safety heat limiter	Safety heat limiter	Safety heat limiter	Safety heat limiter	Safety heat limiter	Safety heat limiter
CASING									
Material	AISI 304 stainless steel	AISI 304 stainless steel / Brass	ABS	ABS	ABS	ABS	ABS + chromed steel	ABS + chromed steel	ABS + stainless steel AISI 304
Finish	Satin Polish White	Satin with gold complements	White Black Grey	White	White	White	Black + polish	Black + polish	Black + satin
Thickness	1,5/1,2 mm	1,2 mm	-	-	-	-	-	-	-
DIMENSIONS									
Height x Width x Depth	280 x 250 x 203 mm	324 x 252 x 168 mm	210 x 100 x 155 mm	230 x 80 x 180 mm	185 x 248 x 138 mm	233 x 248 x 155 mm	220 x 245 x 118 mm	215 x 210 x 93 mm	215 x 210 x 93 mm
Weight	6 Kg	5,5 Kg	0,85 Kg	0,85 Kg	0,85 Kg	1,40 Kg	0,9 Kg	0,8 Kg	0,8 Kg
BENEFITS									
Air temperature (20°C ambient)	49°C at 10 cm	40°C at 10 cm	61°C at 10 cm	63°C at 10 cm	65°C at 10 cm	65°C at 10 cm	63°C at 10 cm	63°C at 10 cm	63°C at 10 cm
Effective flow	6500 l/min	2660 l/min	1300 l/min	1200 l/min	1300 l/min	1300 l/min	1450 l/min	1450 l/min	1450 l/min
Airspeed	133 Km/h	305 Km/h	48 km/h	50 km/h	58 km/h	58 km/h	72 Km/h	72 Km/h	72 Km/h
Noise level at 2m	70 dbA	72 dbA	60 dbA	60 dbA	62 dbA	62 dbA	65 dbA	65 dbA	65 dbA
Socket	NO	NO	NO	NO	NO	YES	NO	NO	NO

(*) approximate values

DISPENSADORESDEJABÓN-SOAP
DISPENSERS - DISTRIBUTEURS DE
SAVON - **DOSATORI DI SAPONE**
DISTRIBUIDORES DE SABÃO -
DISPENSADORESDEJABÓN-SOAP
DISPENSERS - **DISTRIBUTEURS DE**
SAVON - DOSATORI DI SAPONE
DISTRIBUIDORES DE SABÃO -
DISPENSADORESDEJABÓN-SOAP
DISPENSERS - DISTRIBUTEURS DE
SAVON - DOSATORI DI SAPONE
DISTRIBUIDORES DE SABÃO -
DISPENSADORESDEJABÓN-SOAP
DISPENSERS - DISTRIBUTEURS DE
SAVON - DOSATORI DI SAPONE
DISTRIBUIDORES DE SABÃO -
DISPENSADORES DE JABÓN - SOAP
DISPENSERS - DISTRIBUTEURS DE
SAVON - DOSATORI DI SAPONE
DISTRIBUIDORES DE SABÃO -
DISPENSADORESDEJABÓN-SOAP



Uniformity is death;
diversity is life.

Mijail Aleksandrovich Bakunin



...regardless of their origin, race,
their customs, their limitations...

NOFER®

inox evo



NOFER

inox evo NEW evo

WALL MOUNTED, VERTICAL

Anti-drip.
Level viewer

Material
AISI 304 stainless steel

Finish
SATIN (.S)
POLISH (.B)

Vertical format soap dispenser. Wall mounted. Compact, sturdy and very resistant to use. With inner tank for a soap optimal preservation. Combinable with the rest of the EVO design range.



03050.S
58,00 €
Liquid soap dispenser

Dimensions
200 x 125 x 95 mm

Capacity
1200 ml

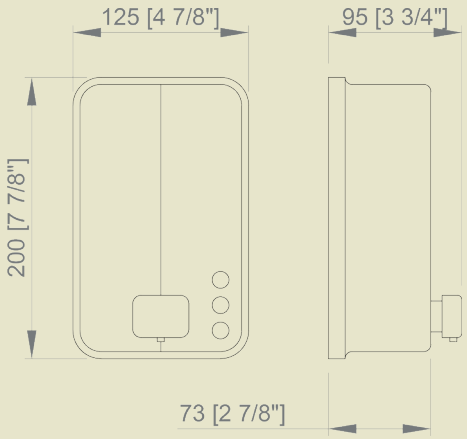



03050.B
62,60 €
Liquid soap dispenser

Dimensions
200 x 125 x 95 mm

Capacity
1200 ml

03050.N
103,50 €

OTHER COLORS
124,00 €

inox

NEW

WALL MOUNTED, VERTICAL

Anti-drip.
Level viewer

Material
AISI 304 stainless steel

Finish
SATIN (.S)
POLISH (.B)
WHITE (.W)



03041.S
50,00 €
Liquid soap dispenser

Dimensions
207 x 122 x 135 mm

Capacity
1200 ml

Vertical format soap dispenser. Wall mounted, vertical. Compact, sturdy and very resistant to use. Satin and polish versions are equipped with an inner tank for a soap optimal preservation.



03041.B
60,50 €
Liquid soap dispenser

Dimensions
207 x 122 x 135 mm

Capacity
1200 ml

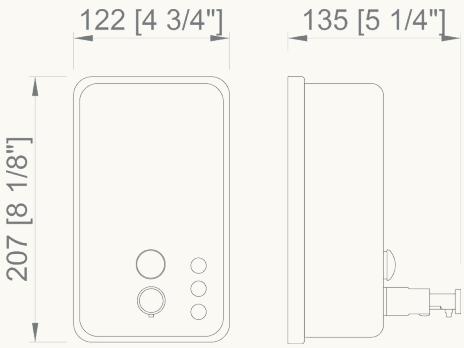



03001.W
56,10 €
Liquid soap dispenser vertical

Dimensions
210 x 121 x 130 mm

Capacity
1200 ml

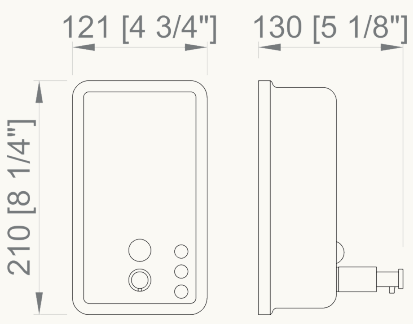

Anti-drip.
Level viewer

inox

WALL MOUNTED, VERTICAL

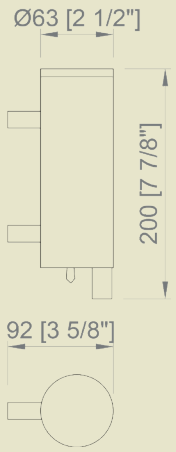

03024.S	03024.B
133,50 €	**122,50 €**

Liquid soap dispenser

Material
AISI 304 stainless steel

Finish
Satin

Finish
Polish

Dimensions
200 mm. Ø 63 mm

Capacity
300 ml



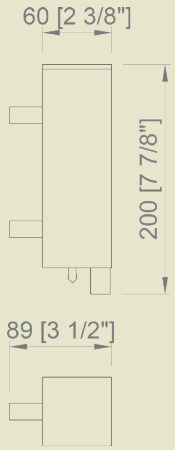

03025.S
127,00 €

Liquid soap dispenser

Material
AISI 304 stainless steel

Finish
Satin

Dimensions
200 x 60 x 89 mm

Capacity
300 ml



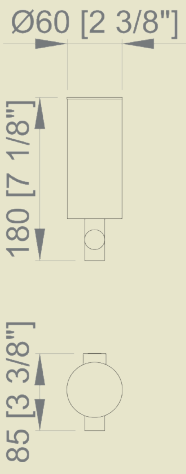

03046.B
73,10 €

Liquid soap dispenser

Material
Chrome-plated brass

Finish
Polish

Dimensions
180 mm. Ø60 mm

Capacity
300 ml

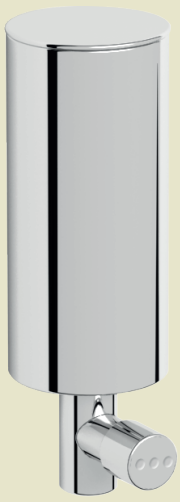

NEW

Anti-drip

Material
AISI 304 stainless steel

Finish
SATIN (.S)
POLISH (.B)

inox

WALL MOUNTED, VERTICAL



03003.B

39,40 €

Conical soap dispenser.
Zamac head and
stainless steel housing.
With level viewer

Dimensions
150 x 80 x 150 mm

Capacity
345 ml

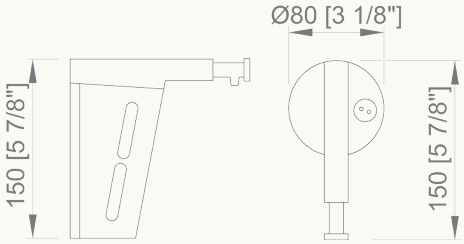



03022.S

52,90 €

Liquid soap dispenser.
Level viewer

Dimensions
160 x 105 x 91 mm

Capacity
820 ml

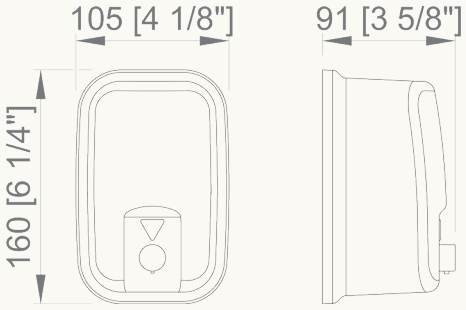

NEW



03001.06.S

28,30 €

03001.06.B

29,00 €

Liquid soap dispenser

Dimensions
200 x 180 x 110 mm

Capacity
600 ml

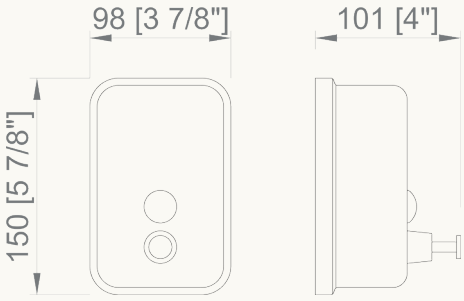

inox

WALL MOUNTED, HORIZONTAL

Anti-drip.
Level viewer

Material
AISI 304 stainless steel

Finish
SATIN (.S)
POLISH (.B)
WHITE (.W)

NEW

Horizontal format soap dispenser. Wall mounted. Compact, sturdy and very resistant to use. Satin and polish versions are equipped with an inner tank for a soap optimal preservation.

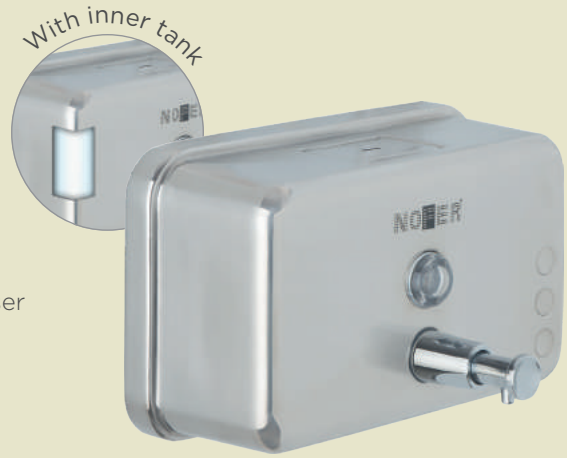

03042.S
53,70 €

Liquid soap dispenser

Dimensions
120 x 200 x 123 mm

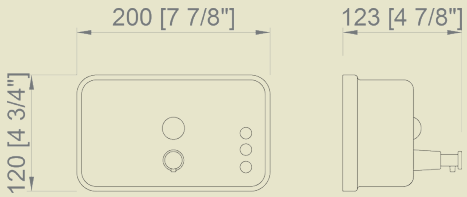



03042.B
56,70 €

Liquid soap dispenser

Dimensions
120 x 200 x 123 mm

NEW

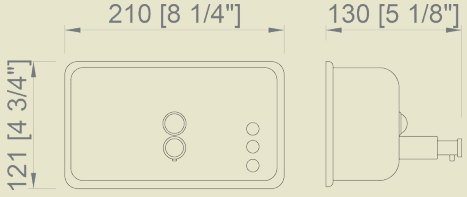

03002.W
56,10 €

Liquid soap dispenser

Dimensions
121 x 210 x 130 mm



inox

WALL MOUNTED, VERTICAL

Anti-drip.
Level viewer

Material
AISI 304 stainless steel

Finish
SATIN (.S)
POLISH (.B)



03004.S
64,50 €

Dimensions
157 x 178 x 125 mm

Capacity
1200 ml

NEW

Horizontal format soap dispenser. Wall mounted. Sturdy and very resistant to use. Double tank version available for a double dispensation



03004.B
74,90 €

Dimensions
157 x 178 x 125 mm

Capacity
1200 ml

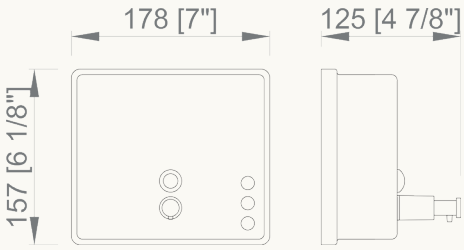



03005.B
59,20 €

Double soap dispenser

Dimensions
160 x 180 x 120 mm

Capacity
Two tanks of 600 ml

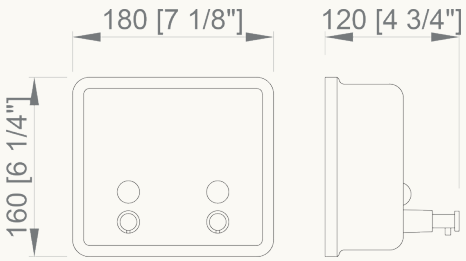

maxclean

Hospital soap dispenser. Equipped with a long activation lever for elbow and forearm operation. The easier way to avoid the spread of germs and bacteria in the sanitary and hospital environment.

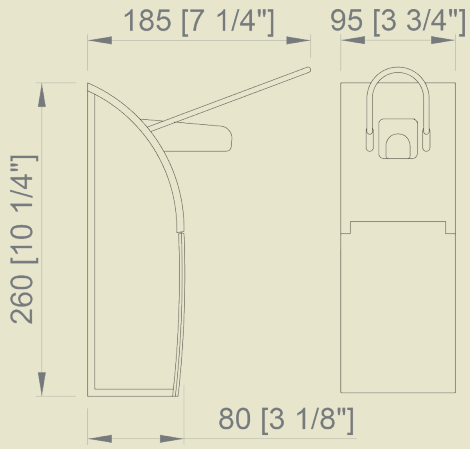

Hospital soap dispenser

Dimensions
260 x 95 x 185 mm

Capacity
500 ml

03013.S
135,00 €

Material
AISI 304 stainless steel and polyethylene

Finish
SATIN



03013.ABS
110,00 €

Material
ABS and polyethylene

03013.AL
127,50 €

Material
Aluminium and polyethylene

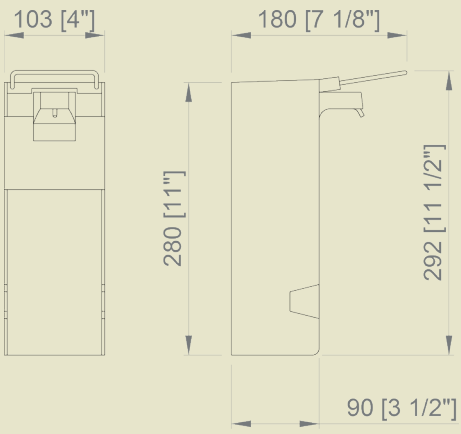

03016.L
140,50 €

Hospital soap dispenser with long lever

Material
ABS and polyethylene

Finish
TRANSLUCENT

Dimensions
292 x 103 x 180 mm

Capacity
1000 ml



automatics evo



NOFER

automatics evo

Anti-drip.
Level viewer

Finish
SATIN (.S)
POLISH (.B)
WHITE (.W)

NEW

Automatic liquid soap dispenser that can be transformed to foam with 03038.FP pump (not included).

Suitable for alcohol-based desinfectants. Battery powered and optionally by transformer (03038.TR optional). EVO range design for a complete bathroom equipment.

03039.S
109,00 €

Material
AISI 304 stainless steel

Dimensions
275 x 105 x 95 mm

Capacity
1000 ml



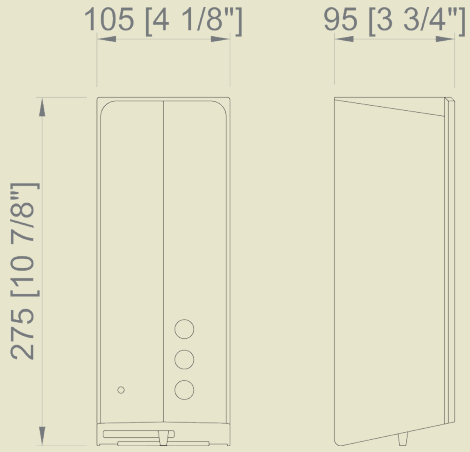

03039.B
115,00 €

Material
AISI 304 stainless steel

Dimensions
275 x 105 x 95 mm

Capacity
1000 ml



ADA COMPLIANT

03039.N
186,50 €

OTHER COLORS
224,00 €

03038.W
65,00 €

Material
ABS

Dimensions
275 x 105 x 95 mm

Capacity
1000 ml



ACCESSORIES

03038.FP
3,50 €

Foam pump suitable for the models 03039.S, 03039.B and 03038.W



03038.TR
13,90 €

AC/DC transformer 220-12 V suitable for the models 03039.S, 03039.B and 03038.W



automatics

Material
AISI 304 stainless steel

Operation
Automatic sensor

Finish
SATIN (.S)
POLISH (.B)

Infrared sensor activated automatic soap dispensers. The right dose with contactless operation. The most hygienic



ADA COMPLIANT

03023.S

107,00 €

Liquid soap dispenser.
Suitable for alcohol based desinfectant

Material
AISI 304 stainless steel

Dimensions
210 x 140 x 100 mm

Capacity
1200 ml

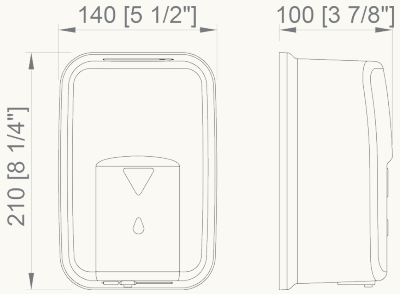

NEW



Battery powered. Consult availability

03106.B

379,55 €

Material
Chrome-plated brass

Dimensions
104 x 45 x 130 mm

Capacity
1000 ml

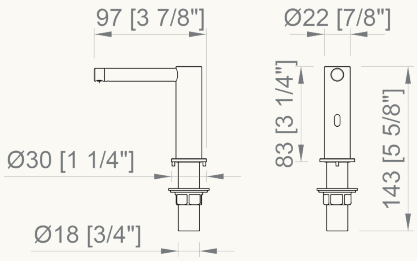

Electronic matching accessories:

NEW



07250.B

557,50 €

Tap

Dimensions
150 x 44 x 163 mm

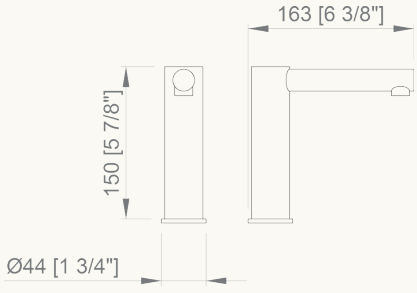

NEW



01910.B

870,00 €

01911.B

870,00 €

Airtap hand dryer

View page 17

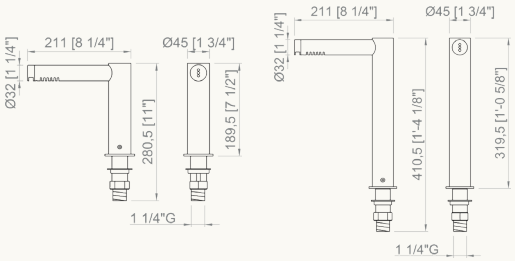

Additional technical information on www.nofer.com

multifeed NEW

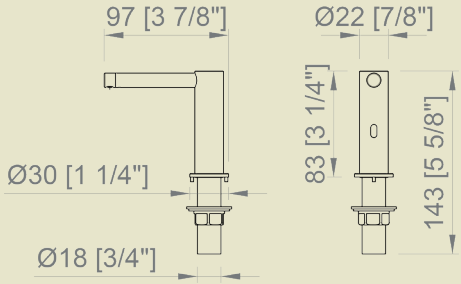

03106.MUL.B

406,00 €

Soap dispenser for multifeed system. Equipped with connection pipe to soap tank

Material
Chrome-plated brass

Dimensions
104 x 45 x 130 mm

Capacity
1000 ml



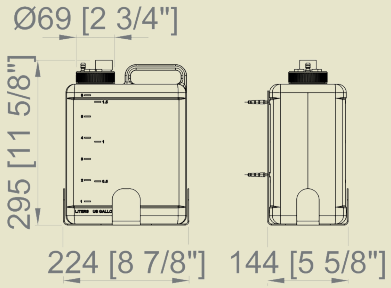

03108.DEP1

727,00 €

Multifeed system soap dispenser tank. Equipped with wall support

Dimensions
295 x 144 x 224 mm

Capacity
6 litres



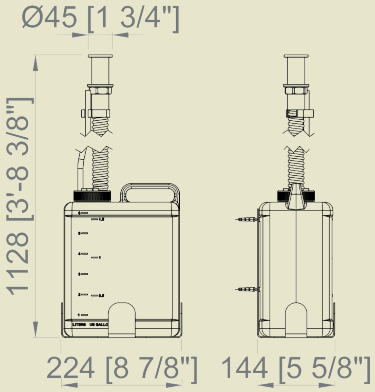

03108.DEP2

392,00 €

Multifeed system soap dispenser tank with soap refill from countertop. Equipped with wall support

Dimensions
Ø 45 mm countertop decorative plug

Capacity
6 litres



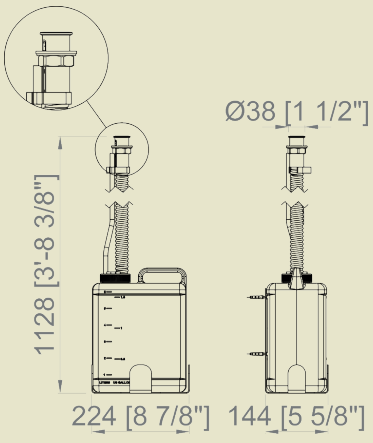

03108.DEP3

312,00 €

Multifeed system soap dispenser tank with soap refill from countertop with refilling Led indicator. Equipped with wall support

Dimensions
Ø 45 mm countertop decorative plug

Capacity
6 litres



classic

Material
ABS

Finish
WHITE (.W)
BLACK (.N)



03036.N

31,60 €

Liquid soap dispenser

Dimensions
210 x 128 x 90 mm

Capacity
1000 ml

Simple and adaptable soap dispensers suitable to all kinds of environments. Compact designs and neutral colors to equip the collective bathroom

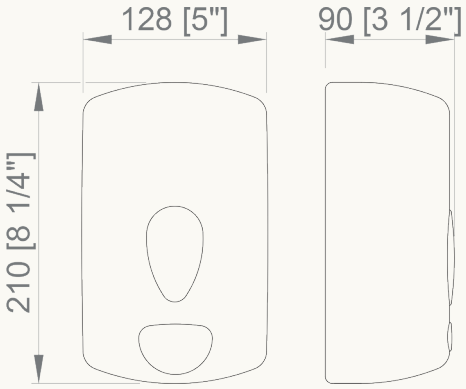



03036.W

16,60 €

Liquid soap dispenser

Dimensions
210 x 128 x 90 mm

Capacity
1000 ml

NEW



03032.T

27,00 €

Double tank soap dispenser

Dimensions
197 x 128 x 65 mm

Capacity
2 x 200 ml

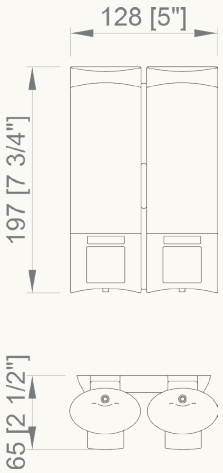

basic

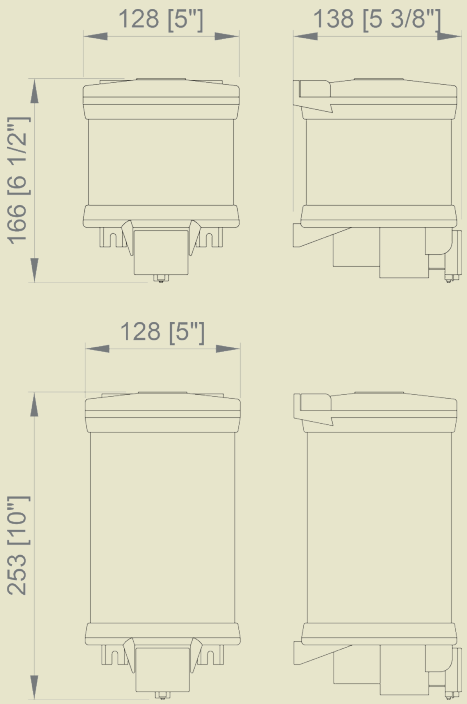

Wall mounted soap dispenser

Deposit
Translucent ABS

Button
Black ABS

03018.W	03019.W
30,70 €	**47,60 €**
Dimensions 166 mm. Ø128 mm	Dimensions 253 mm. Ø128 mm
Capacity 1000 ml	Capacity 2000 ml



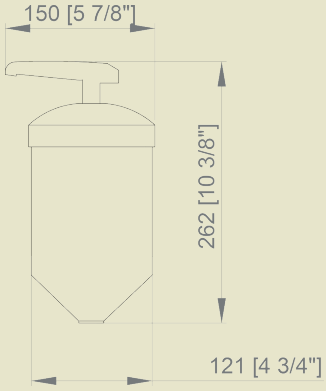

03008.W

22,50 €

Wall mounted soap dispenser

Material
Translucent polypropylene

Dimensions
262 mm. Ø 121 mm

Capacity
1500 ml





03009.W

44,90 €

Wall mounted soap dispenser

Material
Translucent polypropylene

Dimensions
333 mm. Ø 132 mm

Capacity
3500 ml



Material
AISI 304 stainless steel

inserts

NEW



03102.S	84,70 €

To built-in on countertop
(countertop drill Ø 25 - 30 mm)

Finish
SATIN

Stem
Black ABS

Tank
White polyethylene

Capacity
1000 ml

Dimensions
83 x 35 x 120 mm
Tank 220 mm height
Stern 120 mm

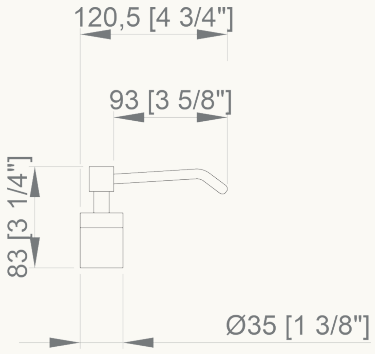

NEW

Foam soap



03103.S	105,00 €

Foam soap dispenser to built-in on countertop (countertop drill Ø 25 - 30 mm).
Decorative top (Ø 35 mm)

Finish
SATIN

Stem
Black ABS

Tank
White polyethylene

Capacity
1000 ml

Dimensions
98 x 35 x 117,5 mm
Tank 220 mm height
Stern 120 mm

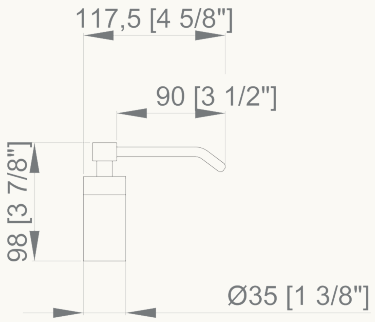



03100.B	60,60 €

To built-in on countertop
(drill Ø 25 - 35 mm).

Finish
POLISH

Stem
Steel

Tank
Stainless steel

Capacity
500 ml

Dimensions
76 x 50 x 130 mm
Tank 145 mm height
Stern 120 mm

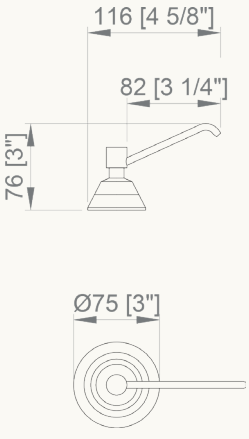



03101.B	41,40 €

To built-in on countertop
(drill Ø 25 - 35mm).

Finish
POLISH

Stem
Black ABS

Tank
White polyethylene

Capacity
1000 ml

Dimensions
76 x 50 x 130 mm
Tank 220 mm height
Stern 120 mm



Additional technical information on www.nofer.com

Material
AISI 304 stainless steel

inserts

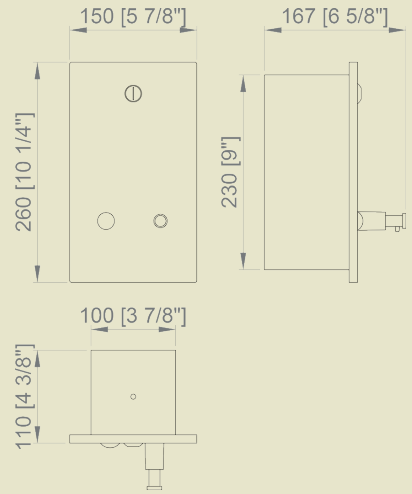

03201.S

125,00 €

Flush mounted. Vertical

Finish
SATIN

Dimensions
260 x 150 x 110 mm

Capacity
1200 ml



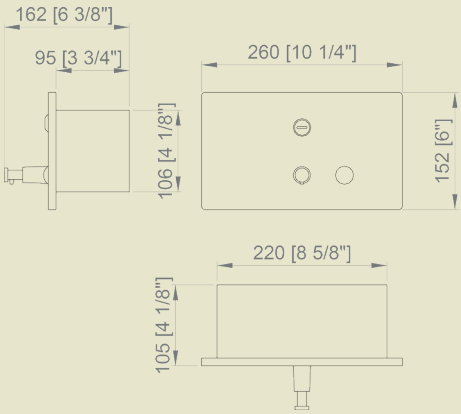

03202.S

125,00 €

Flush mounted. Horizontal

Finish
SATIN

Dimensions
152 x 260 x 105 mm

Capacity
1200 ml



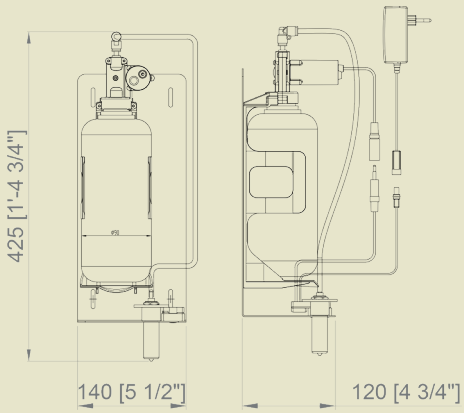

03107.B

422,00 €

Soap dispenser. Installation behind the mirror

Finish
SATIN main body
POLISH outlet

Dimensions
425 x 140 x 120 mm

Capacity
1000 ml

NEW

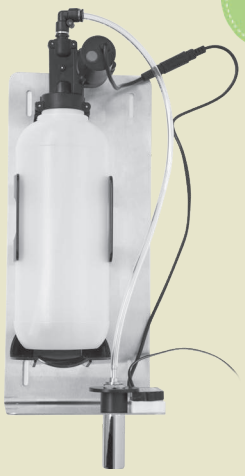

DISPENSADORES DE PAPEL - PAPER DISPENSERS - DISTRIBUTEURS DE PAPIER - **DISTRIBUTORI CARTA** - DISTRIBUIDORES DE PAPEL - DISPENSADORES DE PAPEL - PAPER DISPENSERS - DISTRIBUTEURS DE PAPIER - DISTRIBUTORI CARTA - **DISTRIBUIDORES DE PAPEL** - DISPENSADORES DE PAPEL - PAPER DISPENSERS - DISTRIBUTEURS DE PAPIER - DISTRIBUTORI CARTA - DISTRIBUIDORES DE PAPEL - **DISPENSADORES DE PAPEL** - PAPER DISPENSERS - DISTRIBUTEURS DE PAPIER - DISTRIBUTORI CARTA - DISTRIBUIDORES DE PAPEL - DISPENSADORES DE PAPEL - **PAPER DISPENSERS** - DISTRIBUTEURS DE PAPIER - DISTRIBUTORI CARTA - DISTRIBUIDORES DE PAPEL - DISPENSADORES DE PAPEL - PAPER DISPENSERS - **DISTRIBUTEURS DE PAPIER** - DISTRIBUTORI CARTA - DISTRIBUIDORES DE PAPEL - DISPENSADORES DE PAPEL - PAPER DISPENSERS - DISTRIBUTEURS DE PAPIER - DISTRIBUTORI CARTA - DISTRIBUIDORES DE PAPEL - DISPENSADORES DE PAPEL - PAPER DISPENSERS - DISTRIBUTEURS DE PAPIER - DISTRIBUTORI CARTA - DISTRIBUIDORES



“Men build too many walls and not enough bridges”

Isaac Newton



...regardless of their origin, race,
their customs, their limitations...

NOFER®

industrial evo



NOFER

Content viewer

Finish
SATIN (.S)
POLISH (.B)
WHITE (.W)

industrial evo

Industrial toilet paper roll dispenser. EVO range design for a complete bathroom equipment

Maximum roll: Ø 230 mm
Axle Ø: 40 mm

Consumable
06000

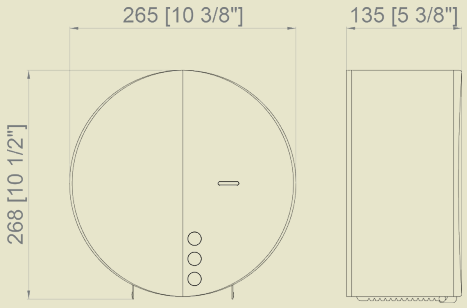

NEW

05046.S	05046.B
52,20 €	55,70 €

Material
AISI 304 stainless steel

Dimensions
268 x 265 x 135 mm



05046.N	OTHER COLORS
132,00 €	159,00 €

industrial

Toilet paper dispenser for industrial roll 250/300 m.
Safety closure with pin tumbler lock

Maximum roll: Ø 230 mm
Axle Ø: 40 mm

Consumable
06000

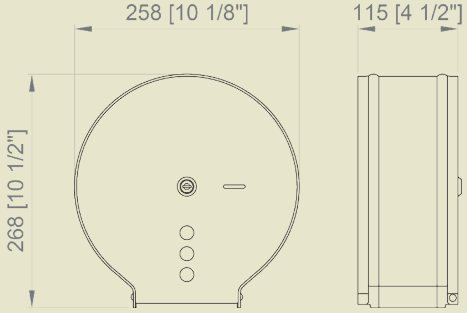

05006.S
42,50 €

Material
AISI 304 stainless steel

Dimensions
268 x 258 x 115 mm

05006.B
42,50 €

Material
AISI 304 stainless steel

Dimensions
268 x 258 x 115 mm

05006.W
32,00 €

Material
AISI 304 stainless steel

Dimensions
268 x 258 x 115 mm



industrial

Content viewer

Material
Stainless steel

Finish
SATIN (.S)
POLISH (.B)
WHITE (.W)



05001.XL.S
54,10 €

Dimensions
290 x 285 x 112 mm

05001.S
43,50 €

Dimensions
260 x 250 x 112 mm

Toilet paper dispenser for industrial roll 250/300 m (500 m for 05001.XL). Safety closure

05001.XL

Maximum roll: Ø 280 mm
Axle Ø: 40 mm

Consumable
06000

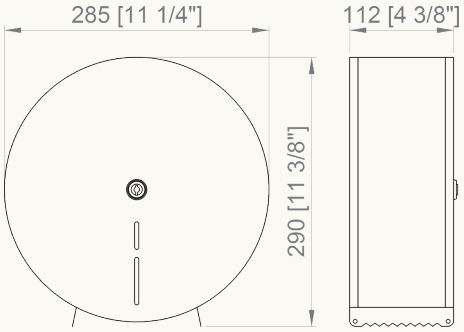



05001.XL.B
57,20 €

Dimensions
290 x 285 x 112 mm

05001.B
45,50 €

Dimensions
260 x 250 x 112 mm

05001

Maximum roll: Ø 230 mm
Axle Ø: 40 mm

Consumable
06001.E



05001.XL.W
51,00 €

Material
White steel

Dimensions
290 x 285 x 112 mm

05001.W
41,40 €

Material
White steel

Dimensions
260 x 250 x 112 mm

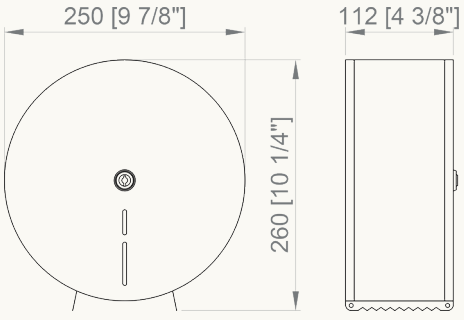

classic

Content viewer

Material
ABS

Finish
WHITE (.W)
BLACK (.N)

Toilet paper dispenser for industrial roll 500 m. Safety closure

05005

Maximum roll: Ø 280 mm
Axle Ø: 40 mm

Consumable
06000

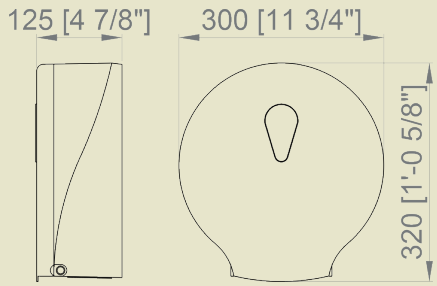

05005.N
43,20 €

Dimensions
320 x 300 x 125 mm

05004.N
41,60 €

Dimensions
274 x 252 x 125 mm



05004

Maximum roll: Ø 230 mm
Axle Ø: 40 mm

Consumable
06001.E

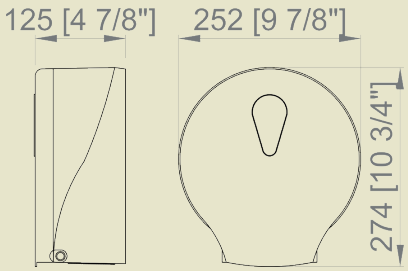

05005.W
19,90 €

Dimensions
320 x 300 x 125 mm

05004.W
19,30 €

Dimensions
274 x 252 x 125 mm



NEW

Double industrial toilet paper roll dispenser

Maximum roll: 280 mm
Axle Ø: 40 mm

Consumable
06000

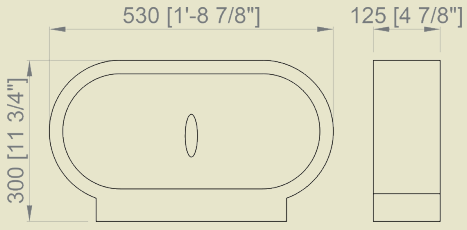

05002.W
62,60 €

Dimensions
300 x 530 x 125 mm



industrial

Content viewer

Material
AISI 304 stainless steel
.W finish painted steel

Finish
SATIN (.S)
POLISH (.B)
WHITE (.W)



05103.S	**82,50 €**
05103.B	**81,40 €**
05103.W	**68,90 €**

Dimensions
290 x 230 x 115 mm

Toilet paper dispenser for roll 250/300 m.
Safety closure

Maximum roll: Ø 220 mm
Axle Ø: 40 mm

Consumable
06001

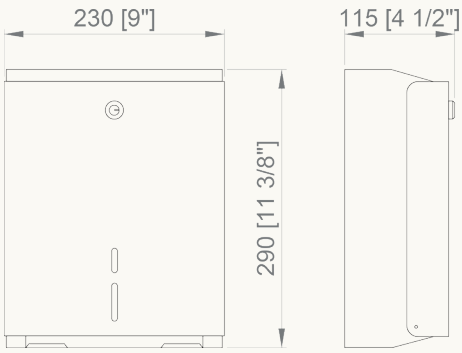



05104.S	**92,10 €**
05104.B	**90,50 €**
05104.W	**74,70 €**

Dimensions
340 x 285 x 115 mm

Toilet paper dispenser for roll 500 m.
Safety closure

Maximum roll: Ø 280 mm
Axle Ø: 40 mm

Consumable
06000

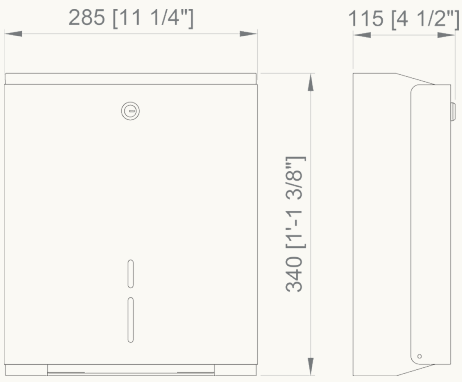

Material
AISI 304 stainless steel tube

industrial

Industrial towel paper roll holders.
Equipped with cutting plate

Consumable
06006.45.E

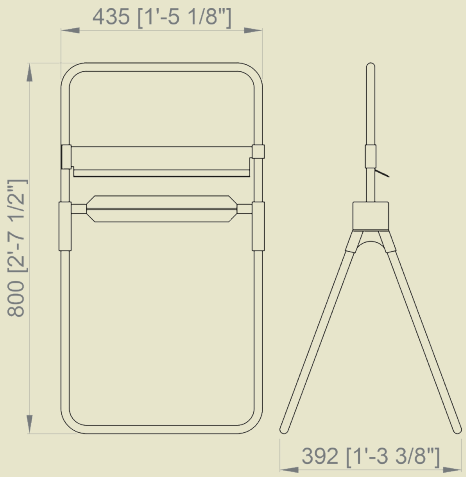

04008.B

54,30 €

Self standing dispenser

Dimensions
800 x 435 x 392 mm

Maximum roll width 380 mm
Maximum Ø 500 mm
Unversal use for all axle diameters



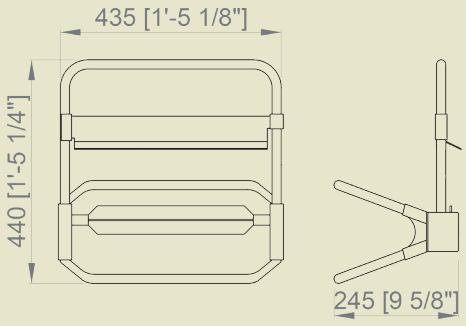

04009.B

52,20 €

Wall dispenser

Dimensions
440 x 435 x 245 mm

Maximum roll width 380 mm
Maximum Ø 400 mm
Unversal use for all axle diameters



domestics



NOFER®

Finish
SATIN (.S)
POLISH (.B)

ONE ROLL DISPENSERS

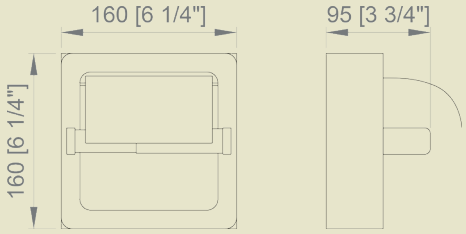

05007.S	05007.B
43,20 €	**43,20 €**

Wall mounted

Material
AISI 304 stainless steel

Dimensions
160 x 160 x 95 mm



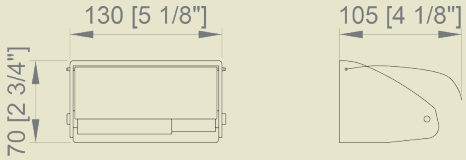

05013.S	05013.B
15,10 €	**14,05 €**

Wall mounted

Material
AISI 304 stainless steel

Dimensions
70 x 130 x 105 mm



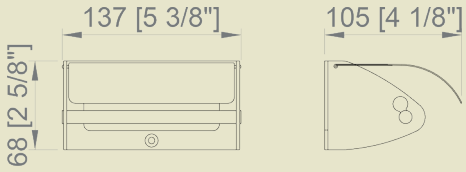

05023.S
17,40 €

Wall mounted

Material
AISI 304 stainless steel

Dimensions
68 x 137 x 105 mm





05018.S	05018.B
23,65 €	**22,35 €**

Wall mounted

Material
AISI 304 stainless steel

Dimensions
50 x 202 x 97 mm

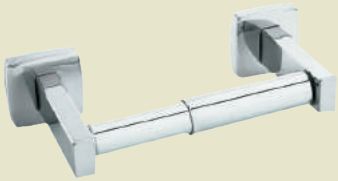

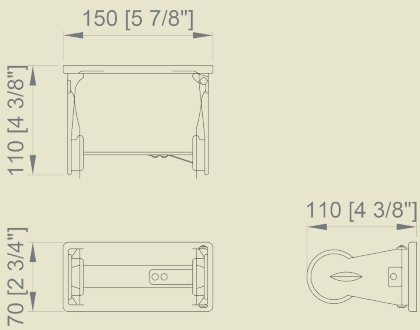

05011.B	16,00 €

Wall mounted

Material
Steel chromed

Dimensions
70 x 150 x 110 mm



Finish
SATIN (.S)
POLISH (.B)

TWO ROLLS DISPENSERS

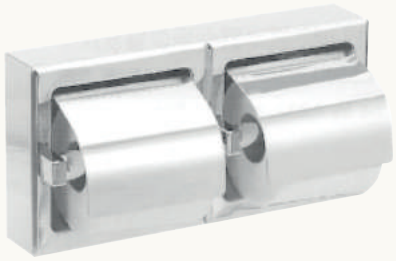

05008.B
66,60 €

Wall mounted, horizontal

Material
AISI 304 stainless steel

Dimensions
160 x 320 x 65 mm

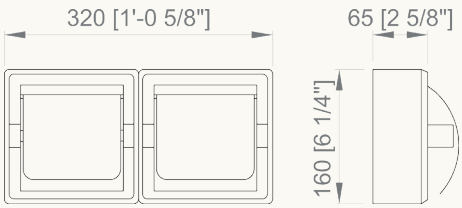



05012.B
24,00 €

Wall mounted, horizontal

Material
Steel chromed

Dimensions
70 x 313 x 107 mm

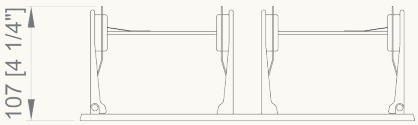

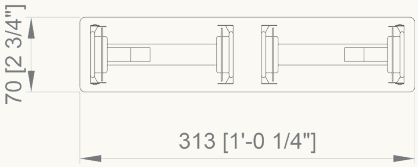



05015.S
77,30 €

Wall mounted, vertical with security close

Material
AISI 304 stainless steel

Dimensions
305 x 152 x 170 mm

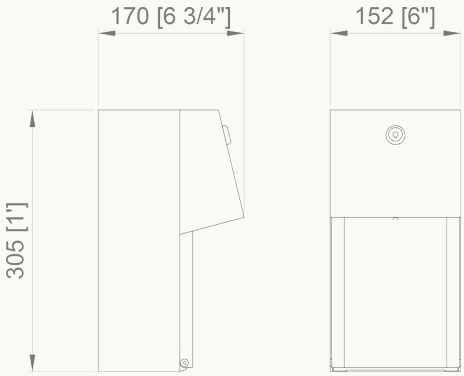



05099.W
44,50 €

Wall mounted, vertical

Material
ABS

Finish
WHITE

Dimensions
300 x 145 x 145 mm

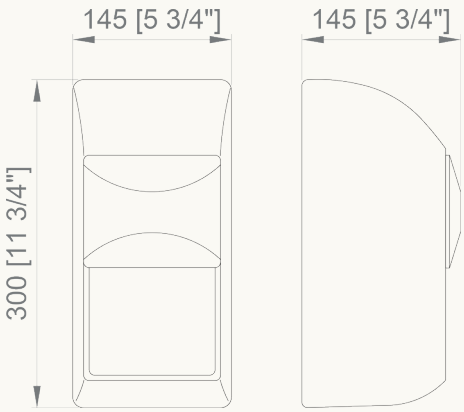

Finish
SATIN (.S)
POLISH (.B)

FLUSH MOUNTED DISPENSERS

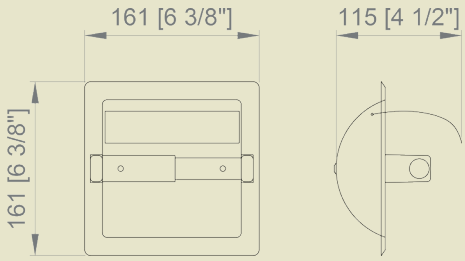

05203.S	05203.B
37,50 €	**37,50 €**

With cover

Material
Stainless steel

Dimensions
161 x 161 x 115 mm



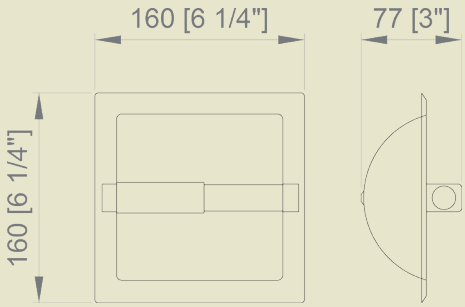

05204.S	05204.B
29,00 €	**29,10 €**

Without cover

Material
Stainless steel

Dimensions
160 x 160 x 77 mm



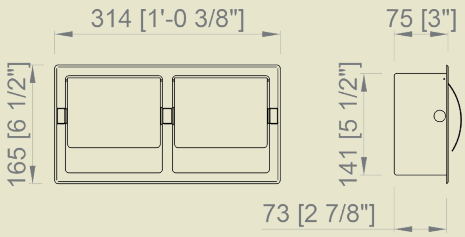

05206.B
45,00 €

Double roll dispenser, horizontal

Material
AISI 304 stainless steel

Dimensions
165 x 314 x 75 mm

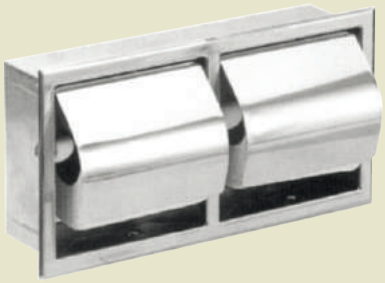

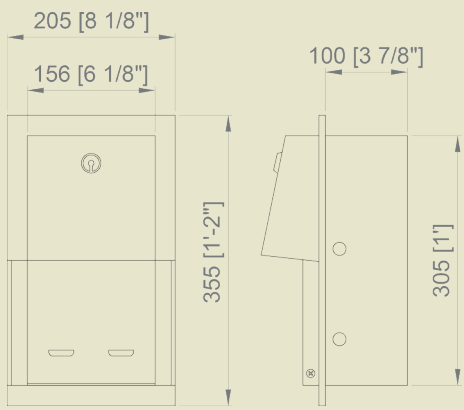

05202.S
113,50 €

Double roll dispenser, vertical. Security closure with pin tumbler lock

Material
AISI 304 stainless steel

Dimensions
355 x 205 x 100 mm



domestics



NOFER

DOMESTICS PAPER DISPENSERS

Toilet paper dispensers for domestic roll size format. Suitable for two, three and four rolls for a better adaptation to all frequencies of use. Heavy duty and resistant to continued use, perfect for public high-concurrency environments. Equipped with safety lock and easy to fill.

Content viewer
Safety closure with pin tumbler lock

Material
AISI 304 stainless steel
Painted steel for .W finish

Finish
SATIN (.S)
POLISH (.B)
WHITE (.W)

TWO ROLLS DISPENSERS

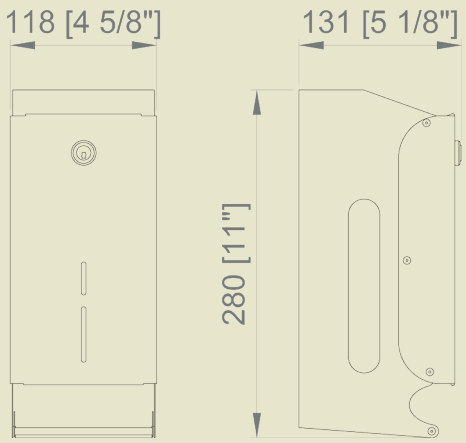

05101.S
52,30 €

05101.B
56,70 €

05101.W
56,70 €

Dimensions
280 x 118 x 131 mm



THREE ROLLS DISPENSERS

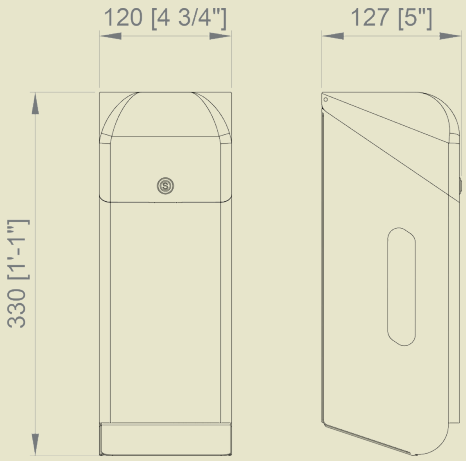

05100.S
83,90 €

05100.B
83,90 €

05100.W
62,40 €

Dimensions
330 x 120 x 127 mm



FOUR ROLLS DISPENSERS

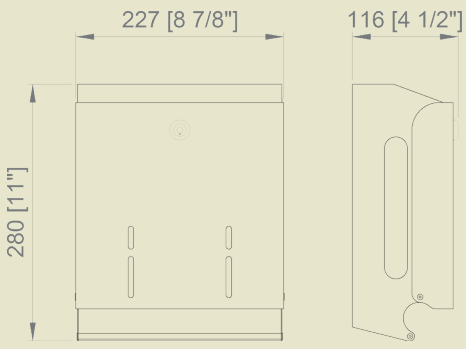

05105.S
106,00 €

05105.B
106,00 €

Dimensions
280 x 227 x 116 mm



bulkpack

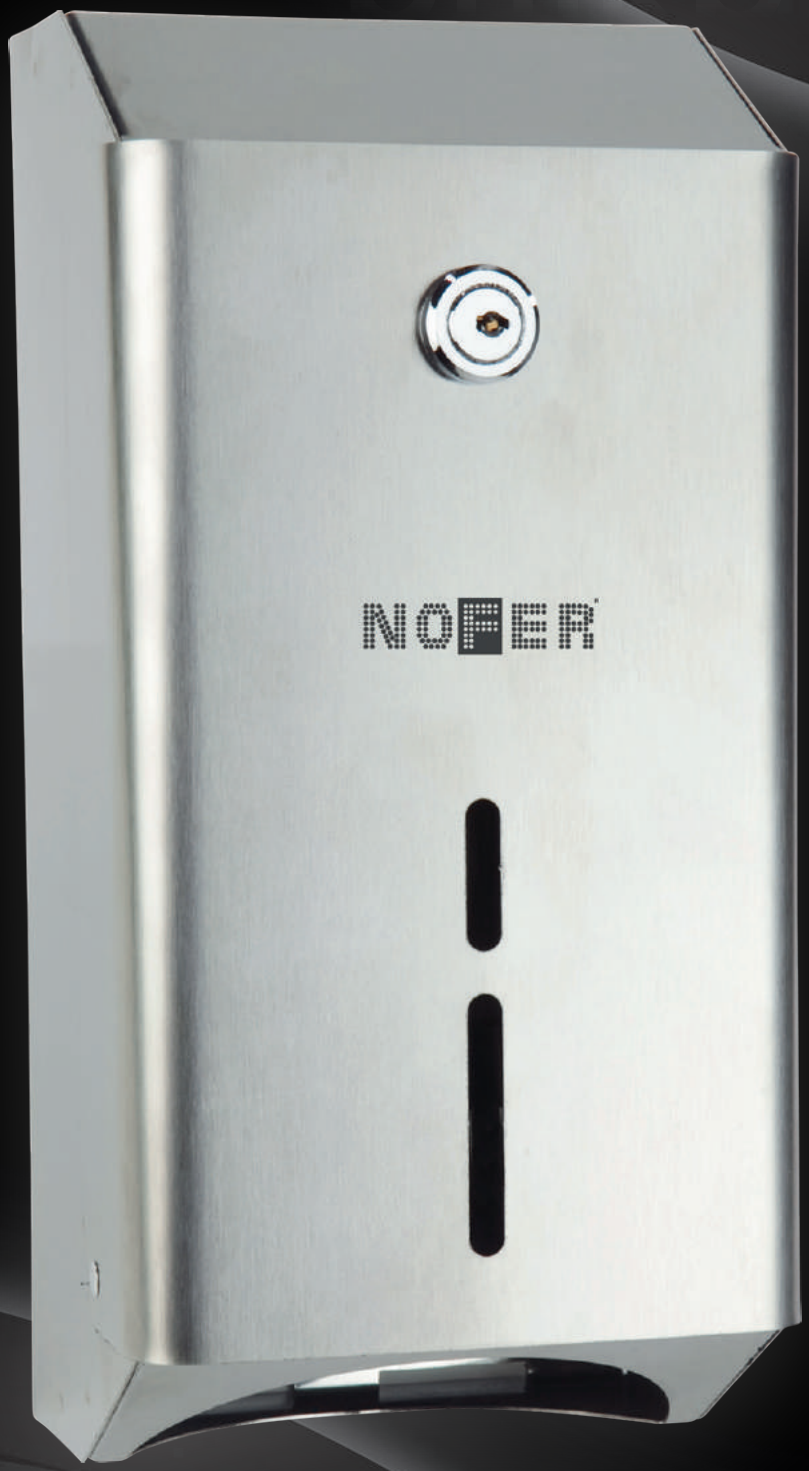

NOFER

Content viewer

Finish
SATIN (.S)
POLISH (.B)
WHITE (.W)
BLACK (.N)

bulkpack

Bulkpack toilet paper dispenser with safety closure with pin tumbler lock

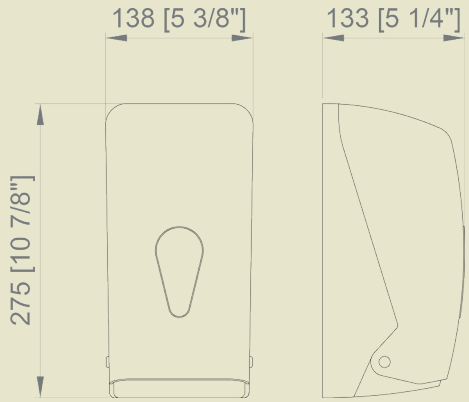

05118.N	05118.W
39,20 €	26,50 €

Material
ABS

Dimensions
275 x 138 x 133 mm

Capacity
400 uses



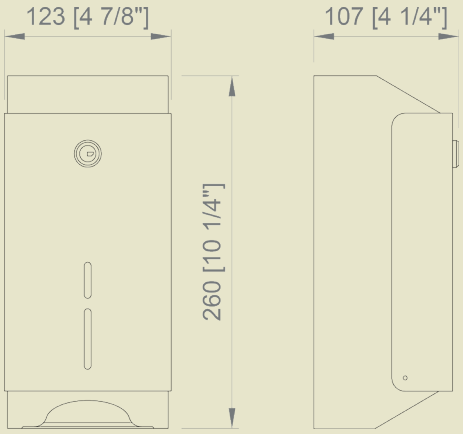

05107.S
78,30 €

With lock

Material
Stainless steel

Dimensions
260 x 123 x 107 mm



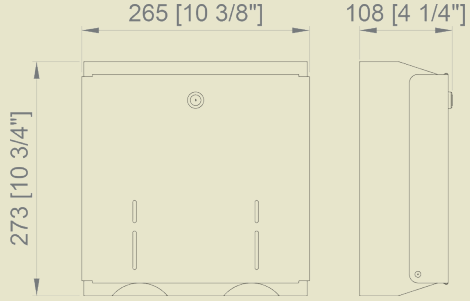

05108.S	05108.B
137,00 €	137,00 €

With pin tumbler lock

Material
Stainless steel

Dimensions
260 x 107 x 123



tissue evo



NOFER

tissue evo

NEW

Content viewer

Material
AISI 304 stainless steel

Finish
SATIN (.S)
POLISH (.B)

Towel paper dispenser with safety closure with pin tumbler lock. Can be combined with other products of the design range EVO.

Consumable
06009.E

04046.S
64,80 €

Dimensions
300 x 255 x 105 mm

Capacity
450 uses



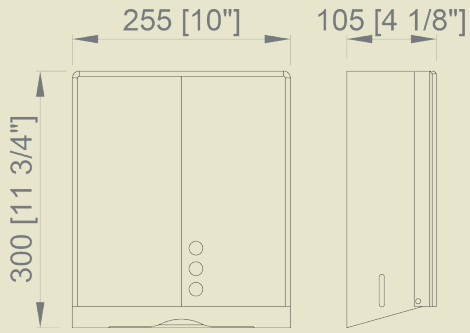

04046.N
137,50 €

OTHER COLORS
165,00 €

04046.B
65,20 €

Dimensions
300 x 255 x 105 mm

Capacity
450 uses



PAPER DISPENSERS

tissue

NEW

Content viewer

Material
AISI 304 stainless steel
Painted steel for .W finish

Finish
SATIN (.S)
POLISH (.B)
WHITE (.W)



04006.S

50,00 €

Dimensions
300 x 280 x 100 mm

Paper towel dispenser with safety lock

Consumable
06009.E



04006.B

51,00 €

Dimensions
300 x 280 x 100 mm

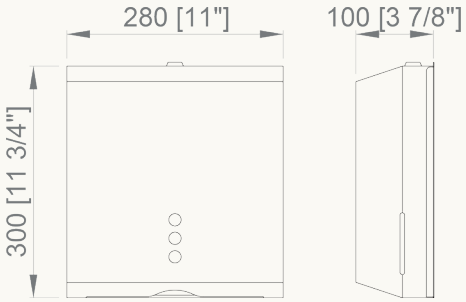



04006.W

35,00 €

Dimensions
300 x 280 x 100 mm

tissue

Content viewer

Material
AISI 304 stainless steel
Painted steel for .W finish

Finish
SATIN (.S)
POLISH (.B)
WHITE (.W)

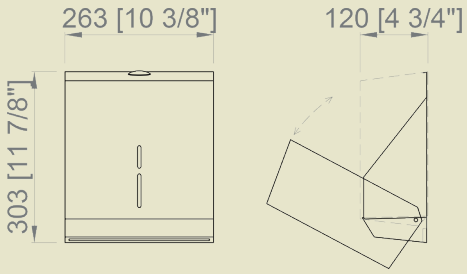

04005.S	04005.B
52,00 €	**52,00 €**

Paper towel dispenser with safety closure with pin tumbler lock

Dimensions
303 x 263 x 120 mm

Capacity
450 uses

Consumable
06009.E



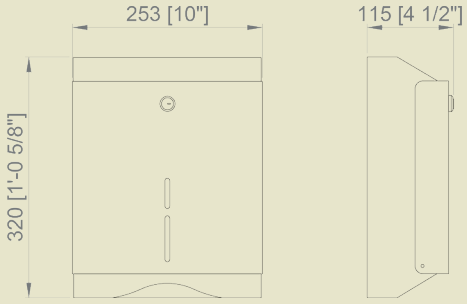

04010.S	04010.B
76,50 €	**76,70 €**

Paper towel dispenser with safety closure with pin tumler lock

Dimensions
320 x 253 x 115 mm

Capacity
500 uses

Consumable
06009.E



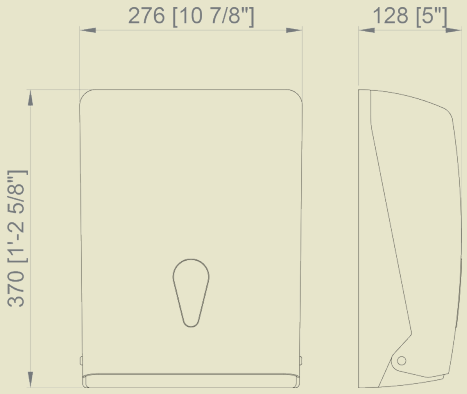

04020.N	04020.W
44,40 €	**21,65 €**

Paper towel dispenser with safety closure

Material
ABS

Finish
WHITE (.W)
BLACK (.N)

Dimensions
370 x 276 x 128 mm

Capacity
600 uses

Consumable
06009.E



wick

Safety closure with pin tumbler lock

Material
AISI 304 stainless steel

Finish
SATIN (.S)
POLISH (.B)

Capacity
One center-pull roll



Towel paper dispenser for center-pull roll

04099.S	04099.B
133,00 €	133,00 €

Dimensions
310 x 250 x 215 mm
Maximum roll: Ø 200 mm
Ø: 200 mm

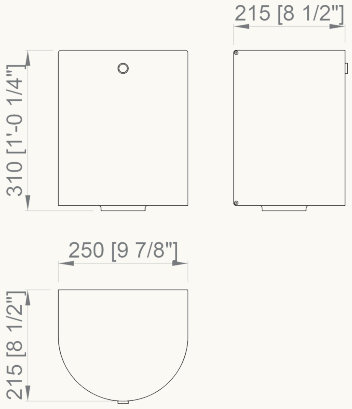



Towel paper dispenser in center-pull roll

04099.MINI.S	04099.MINI.B
110,00 €	110,00 €

Dimensions
310 x 175 x 160 mm
Maximum roll: Ø 200 mm
Ø: 135 mm

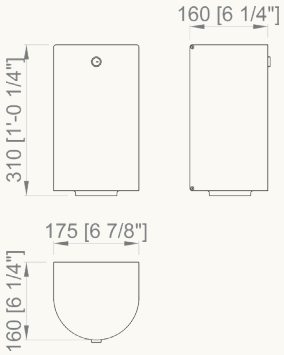



Towel paper dispenser in center-pull roll

04098.S	04098.B
124,00 €	120,90 €

04098.W
112,00 €

Dimensions
280 x 242 x 242 mm
Maximum roll: Ø 200 mm
Ø: 200 mm

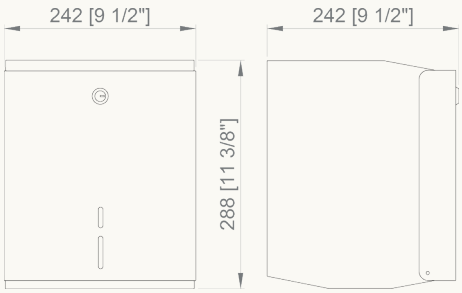

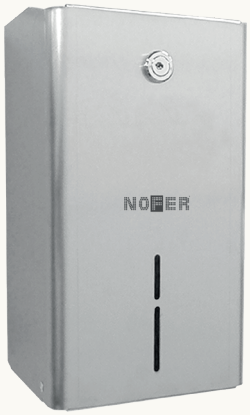

Towel paper dispenser in center-pull roll

04098.MINI.S	04098.MINI.B
86,50 €	86,50 €

Dimensions
260 x 148 x 137 mm
Maximum roll: Ø 200 mm
Ø: 135 mm

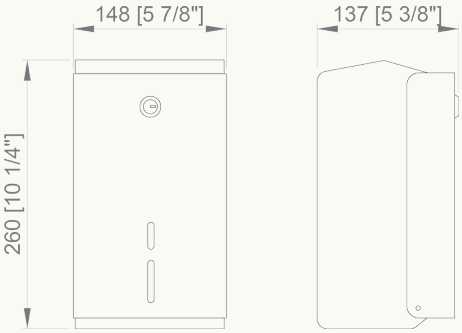

wick

Content viewer

Material
ABS

Finish
WHITE (.W)
BLACK (.N)

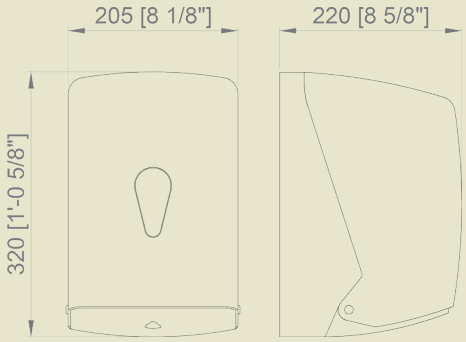

Towel paper dispenser for center-pull roll. Safety closure. Available in standard size and mini size

Maximum roll: 205 mm
Ø: 195 mm

04108.N	04108.W
54,30 €	**27,80 €**

Dimensions
320 x 205 x 220 mm

Capacity
One center-pull roll

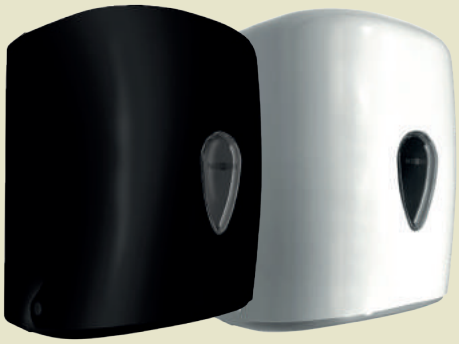

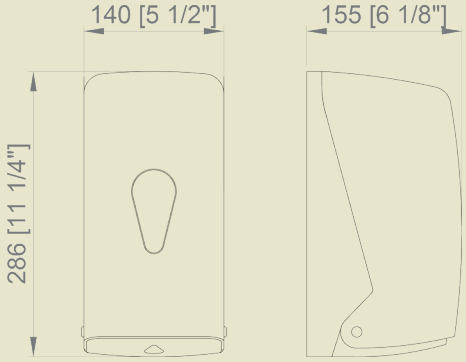

Maximum roll: 200 mm
Ø: 135 mm

04108.MINI.N	04108.MINI.W
39,20 €	**17,85 €**

Dimensions
286 x 140 x 155 mm

Capacity
Center-pull roll



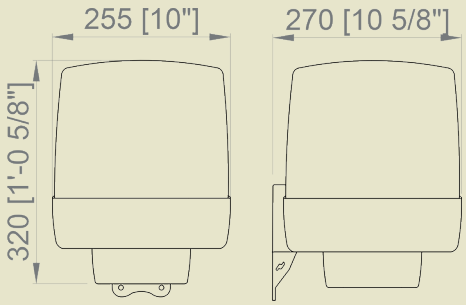

04101.T
53,00 €

Material
Polypropylene

Finish
WHITE AND FUMÉ GRAY

Dimensions
320 x 255 x 270 mm
Maximum roll: Ø 200 mm
Ø: 135mm



Material
AISI 304 stainless steel

roll NEW



04035.S

441,00 €

Towel paper dispenser - automatic supply - manual cut. Operates with batteries. Installation on surface

Finish
SATIN

Dimensions
431 x 330 x 216 mm
Maximum roll:
Ø200 x 220 mm

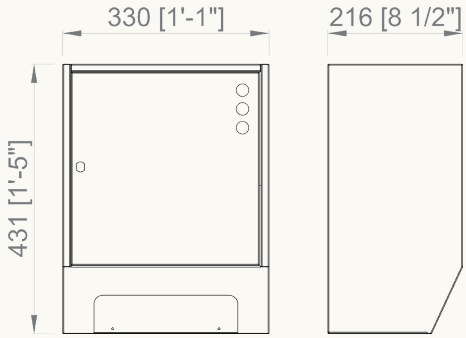



04035.REC.S

556,00 €

Towel paper dispenser - automatic supply - manual cut. Operates with batteries. Semi built-in installation

Finish
SATIN

Dimensions
491 x 384 x 216 mm
Maximum roll:
Ø200 x 220 mm

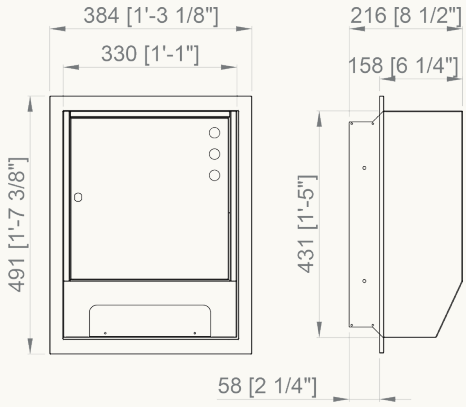

roll

Folded paper towel (in roll) dispensers
with safety lock

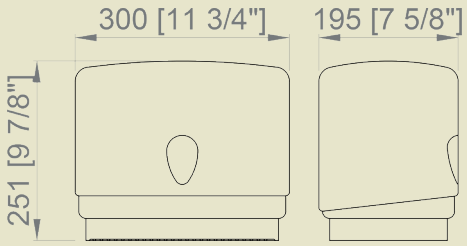

04003.W
53,50 €

For paper towel folded or rolled with content viewer

Material
WHITE ABS

Dimensions
251 x 300 x 195 mm
Maximum roll: Ø 240 mm
Ø: 155 mm



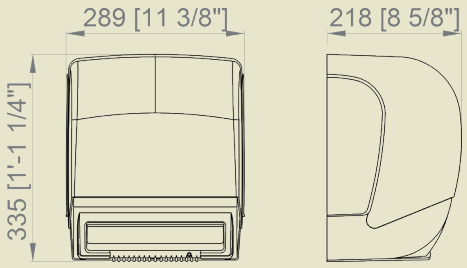

04004.2.BK	04004.2.W
209,00 €	**209,00 €**

Paper towel dispenser - automatic sypply - manual cut - with content viewer. Operates with batteries

Material
WHITE ABS (04004.2.W)
BLACK ABS (04004.2.BK)

Dimensions
335 x 289 x 218 mm
Maximum roll:
Ø 200 x 220 mm



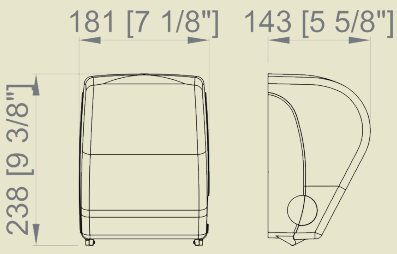

04032.2.W	04032.2.BK
173,00 €	**173,00 €**

Paper towel dispenser - automatic supply and cut. Operates with batteries

Material
WHITE ABS (04032.2.W)
BLACK ABS (04032.2.BK)

Dimensions
238 x 181 x 143 mm
Maximum roll:
Ø 210, 197-210 mm



ACCESORIOS DE BAÑO - BATHROOM ACCESSORIES - ACCESSORIES DE SALLE DE BAIN - **ACCESSORI DA BAGNO** - ACESSÓRIOS DE BANHO - ACCESORIOS DE BAÑO - BATHROOM ACCESSORIES - ACCESSORIES DE SALLE DE BAIN - ACCESSORI DA BAGNO - ACESSÓRIOS DE BANHO - **ACCESORIOS DE BAÑO** - BATHROOM ACCESSORIES - ACCESSORIES DE SALLE DE BAIN - ACCESSORI DA BAGNO - ACESSÓRIOS DE BANHO - ACCESORIOS DE BAÑO - BATHROOM ACCESSORIES - ACCESSORIES DE SALLE DE BAIN - ACCESSORI DA BAGNO - ACESSÓRIOS DE BANHO - ACCESORIOS DE BAÑO - **BATHROOM ACCESSORIES** - ACCESSORIES DE SALLE DE BAIN - ACCESSORI DA BAGNO - ACESSÓRIOS DE BANHO - ACCESORIOS DE BAÑO - BATHROOM ACCESSORIES - ACCESSORIES DE SALLE DE BAIN - ACCESSORI DA BAGNO - ACESSÓRIOS DE BANHO - ACCESORIOS DE BAÑO - BATHROOM ACCESSORIES - **ACCESSORIES DE SALLE DE BAIN** - ACCESSORI DA BAGNO - ACESSÓRIOS DE BANHO -ACCESORIOS DE BAÑO - BATHROOM ACCESSORIES - ACCESSORIES DE SALLE DE BAIN - ACCESSORI DA BAGNO - **ACESSÓRIOS DE BANHO** - ACCESORIOS DE BAÑO - BATHROOM ACCESSORIES - ACCESSORIES DE SALLE DE BAIN - ACCESSORI DA BAGNO - ACESSÓRIOS DE BANHO



...regardless of their origin, race,
their customs, their limitations...

NOFER®

black



NOFER®

Material
ABS

Finish
Soft touch BLACK

black

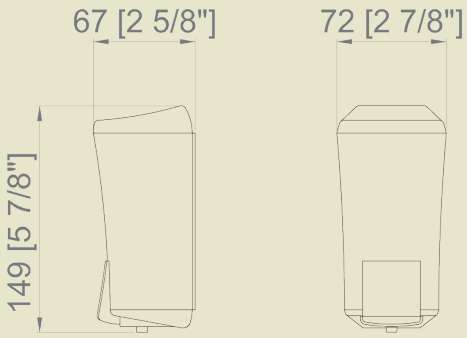

03010.BK

53,40 €

Mural refillable liquid soap dispenser

Dimensions
149 x 67 x 72 mm

Capacity
170 ml



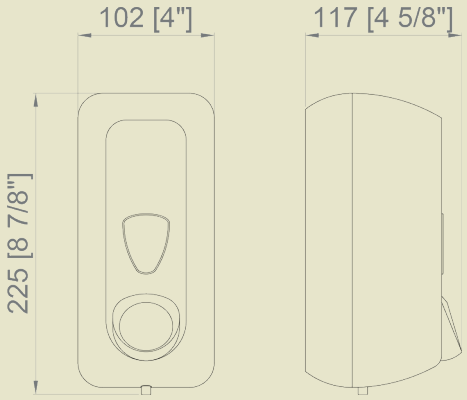

03011.BK

73,20 €

Mural refillable liquid soap dispenser

Dimensions
225 x 102 x 117 mm

Capacity
550 ml



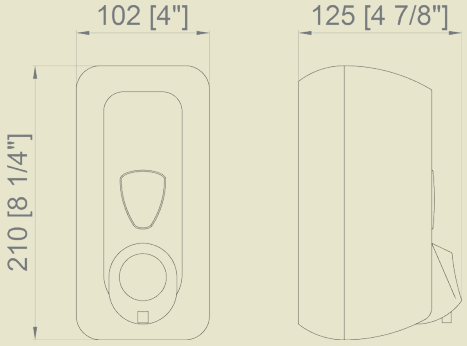

03012.BK

80,20 €

Mural refillable foam soap dispenser with cartridge

Dimensions
210 x 102 x 125 mm

Capacity
500 ml

Consumable
Rechargeable cartridge
06025.K (Price: 0,00 €)



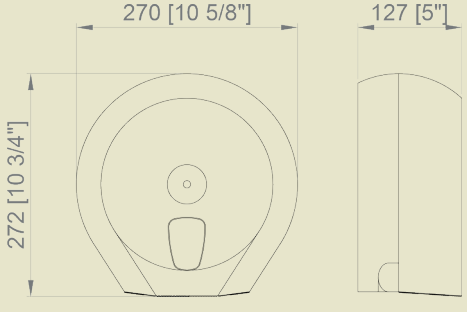

05010.BK

86,10 €

Industrial toilet paper dispenser

Dimensions
272 x 270 x 127 mm
Maximum roll: Ø 230 mm
Axle Ø: 42 mm



Material
ABS

Finish
Soft touch BLACK

black



05011.BK

93,30 €

Extra-large toilet paper industrial dispenser

Dimensions
332 x 325 x 127 mm
Maximum roll: Ø 290 mm
Axle Ø: 42 mm

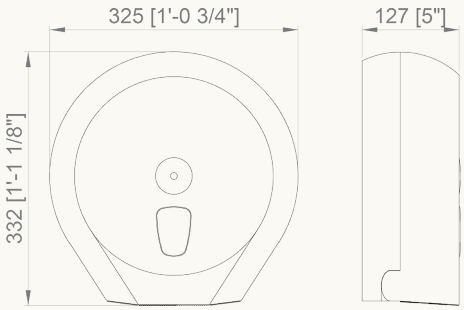



05012.BK

49,10 €

Toilet paper dispenser

Dimensions
135 x 150 x 150 mm

Capacity
Domestic roll

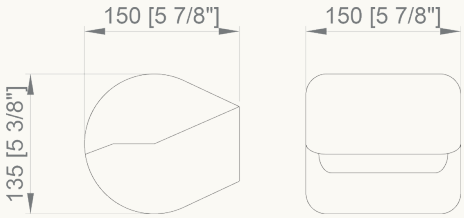



04030.BK

57,40 €

Bulkpack toilet paper towels dispenser

Dimensions
210 x 160 x 125 mm

Capacity
350 towels

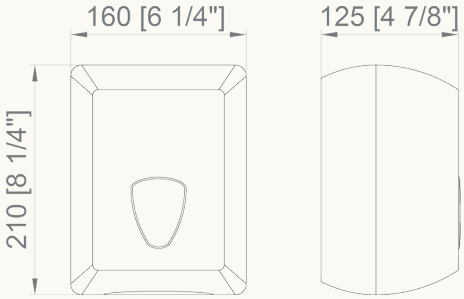



04031.BK

89,70 €

Paper towel dispenser

Dimensions
300 x 290 x 110 mm

Capacity
250 towels

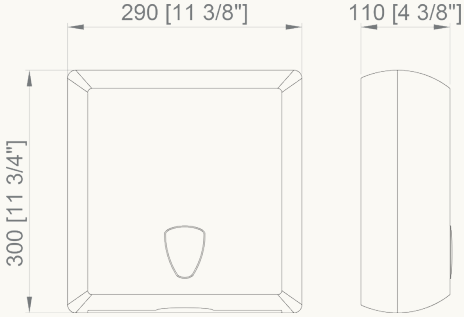

Additional technical information on www.nofer.com

Material
ABS

Finish
Soft touch BLACK

black

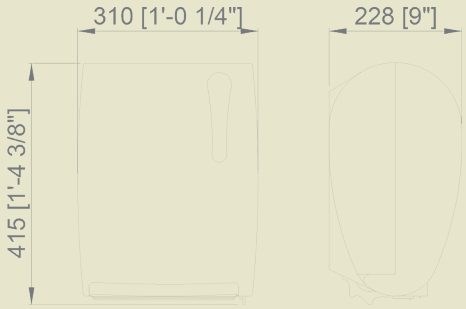

04032.BK

300,00 €

Paper towel dispenser AUTOMATIC CUT. Manual supply. automatic cut. Operates with batteries

Dimensions
415 x 228 x 310 mm
Max. roll Ø 190 x 220 mm



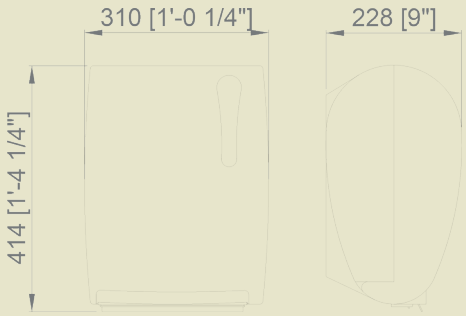

04033.BK

312,00 €

Electronic paper towel dispenser. Automatic supply. MANUAL CUT. Operated with batteries

Dimensions
414 x 310 x 228 mm
Max. roll Ø 200 x 220 mm



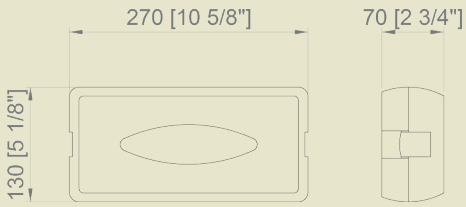

04027.BK

43,00 €

Tissue dispenser

Dimensions
70 x 270 x 130 mm

Capacity
Box of tissues

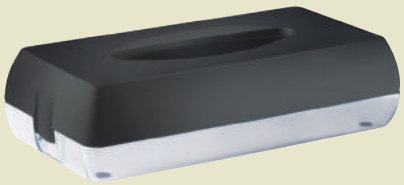

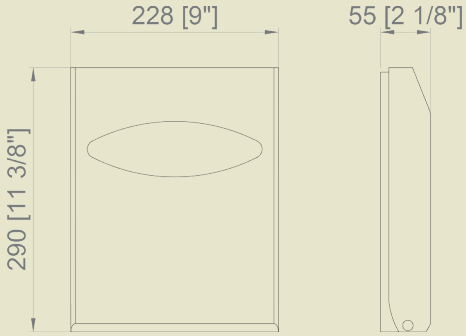

04028.BK

66,20 €

Hygienic rings dispenser

Dimensions
290 x 228 x 55 mm

Capacity
200 folded rings



Material
ABS

Finish
Soft touch BLACK

black



04029.BK

24,50 €

Hygienic bag dispenser

Dimensions
95 x 135 x 32 mm

Capacity
25 bags

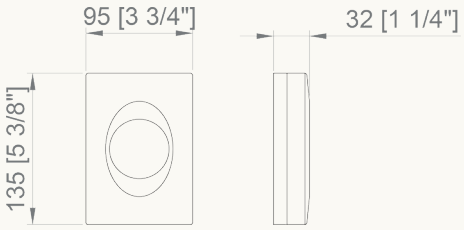



09108.BK

89,40 €

Standing toilet brush holder on chromed base

Dimensions
485 x 120 x 120 mm





09109.BK

60,00 €

Toilet brush holder with chromed wall bracket

Dimensions
485 x 93 x 120 mm

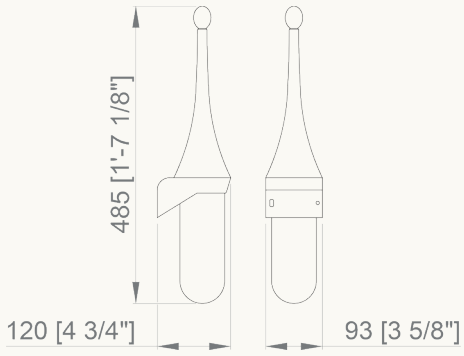

Material
ABS

Finish
Soft touch BLACK

black

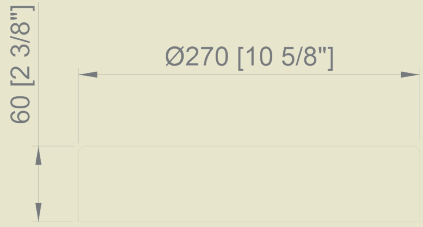

14029.BK

21,90 €

Bagholder ring for 14028.BK bin

Dimensions
60 mm. Ø 270 mm



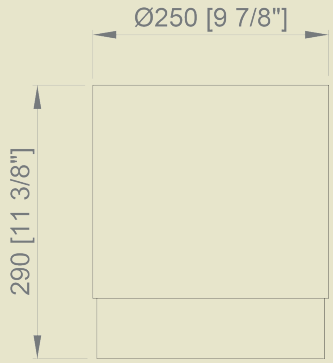

14028.BK

59,70 €

Self-standing bin

Dimensions
290 mm. Ø 250 mm

Capacity
13 litres



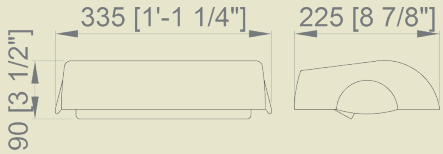

14040.BK

32,20 €

Bin cover for 14030.BK bin

Dimensions
90 x 335 x 225 mm



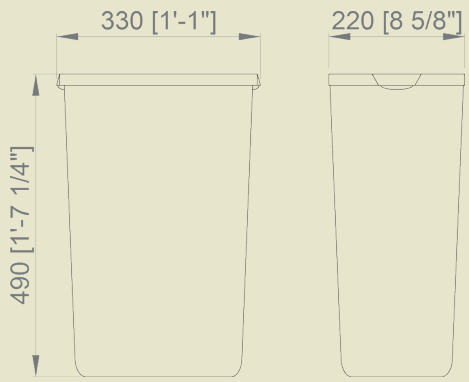

14030.BK

63,30 €

Self-standing bin

Dimensions
490 x 330 x 220 mm

Capacity
23 litres



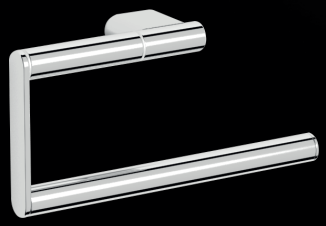

















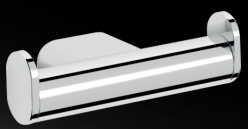







NOFER®


Santorini
NOFER

santorini

NEW

Material
Chrome-plated brass

Finish
POLISH (.B)

· Collection of bathroom accessories made out of chrome-plated brass
· Complements of blown glass
· Nuts and bolts of stainless Steel
· Fixing to wall using screw with mounting plate system

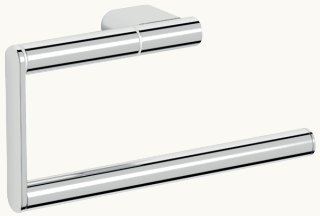

16341.B

40,00 €

Towel rack

Dimensions
100 x 206 x 44 mm
Ø 18 mm

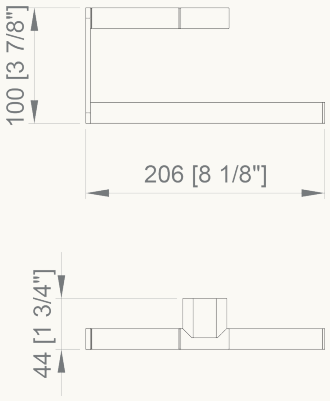

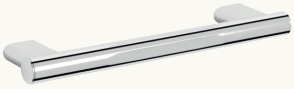

16331.B

51,90 €

Handle with non-slip grip.
Ergonomic, suitable as a technical aid

Dimensions
25 x 304 x 80 mm
Ø 25 mm

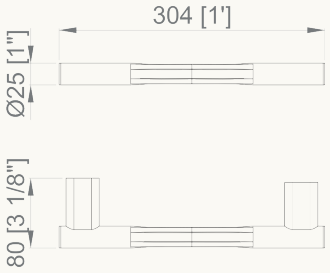



16330.B

60,90 €

Towel rack

Dimensions
22 x 672 x 77 mm
Ø 22 mm

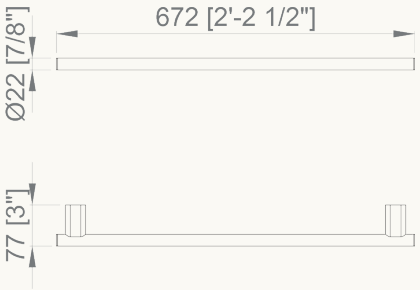



16332.B

60,20 €

Angular handle.
Ergonomic, suitable as a technical aid

Dimensions
172 x 373 x 80 mm
Ø 25 mm

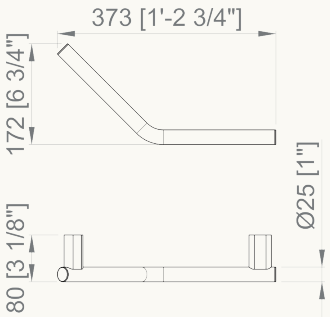

Additional technical information on www.nofer.com

santorini NEW

· Collection of bathroom accessories made out of chrome-plated brass
· Complements of blown glass
· Nuts and bolts of stainless Steel
· Fixing to wall using screw with mounting plate system

Material
Chrome-plated brass

Finish
POLISH (.B)

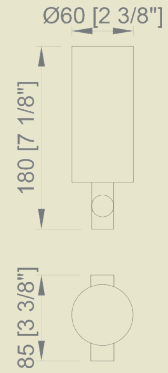

03046.B
73,10 €

Liquid soap dispenser

Dimensions
180 mm x 60 x 85 mm

Capacity
150 ml





16340.B
32,90 €

Soapdish with wall support

Dimensions
43mm. Ø 112 mm



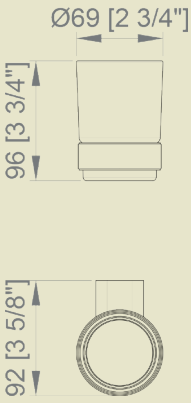

16339.B
32,90 €

Glass for toothbrush with wall support

Dimensions
96 x 69 x 92 mm

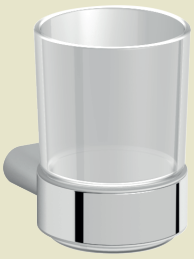



16333.B
51,90 €

Toilet paper roll holder with cover

Dimensions
100 x 133 x 44 mm



santorini

NEW

Material
Chrome-plated brass

Finish
POLISH (.B)

· Collection of bathroom accessories made out of chrome-plated brass
· Complements of blown glass
· Nuts and bolts of stainless Steel
· Fixing to wall using screw with mounting plate system

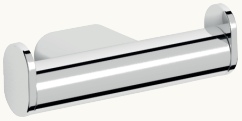

16343.B
26,40 €

Double hanger

Dimensions
32 x 117 x 48 mm

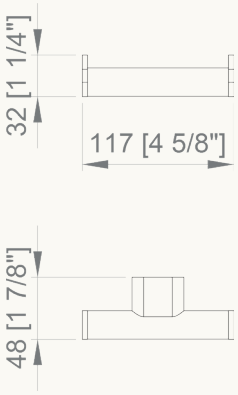



16335.B
45,90 €

Toilet paper roll holder
with top shelf feature

Dimensions
103 x 200 x 127 mm

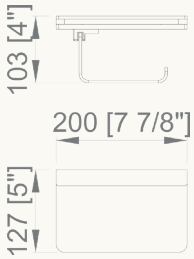



16334.B
30,00 €

Spare toilet paper holder

Dimensions
Ø 22 mm





16342.B
68,40 €

Toilet brush holder with
wall support

Dimensions
381 x 96 x 117 mm



santorini NEW

· Collection of bathroom accessories made out of chrome-plated brass
· Complements of blown glass
· Nuts and bolts of stainless Steel
· Fixing to wall using screw with mounting plate system

Material
Chrome-plated brass

Finish
POLISH (.B)

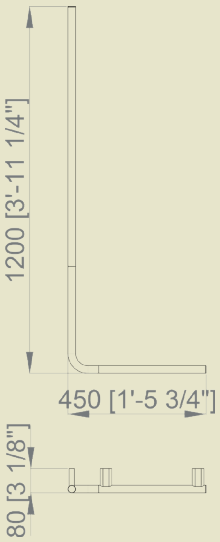

16345.B

206,00 €

Angular support bar for shower

Dimensions
1200 x 450 x 80 mm
Ø 25 mm



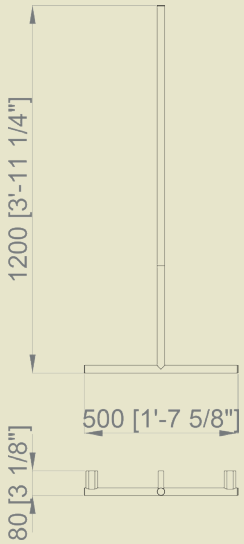

16344.B

228,00 €

Support bar for shower

Dimensions
1200 x 500 x 80 mm
Ø 25 mm




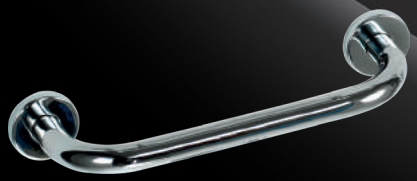









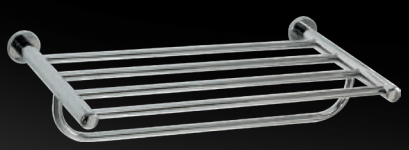

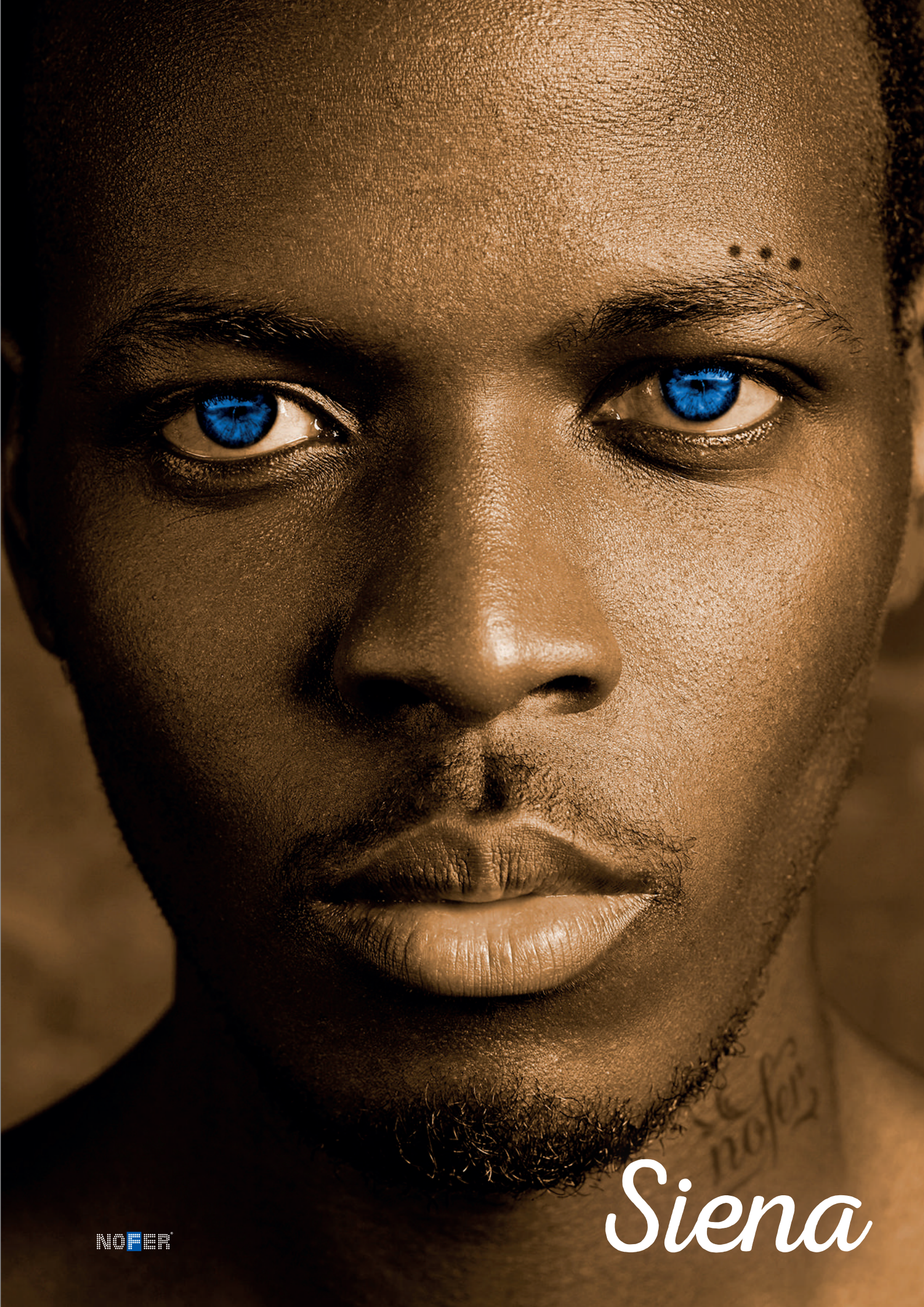
Siena
NOFER

siena

Material
Chrome-plated brass

Finish
POLISH (.B)

· Collection of bathroom accessories made of chrome-plated brass
· Complements of blown glass
· Nuts and bolts of stainless steel
· Fixing screw to wall using mounting plate system



16357.B

33,30 €

Large towel ring

Dimensions
219 x 200 x 65 mm
Ø ring tube 12 mm

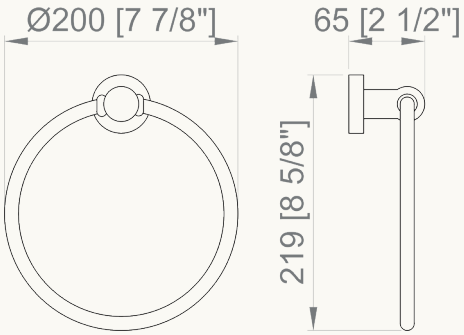



16352.B

36,00 €

Straight bar, tube Ø 25 mm.
Double use (handle / towel bar)

Dimensions
50 x 300 x 105 mm
Ø 25 mm

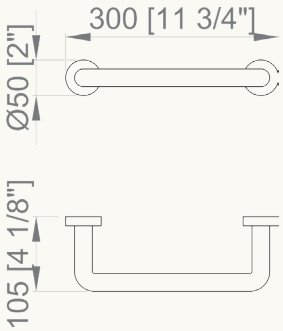



16351.B

39,40 €

Straight bar

Dimensions
50 x 520 x 85 mm
Ø 20 mm

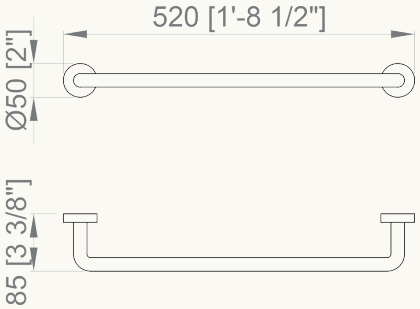

siena

Material
Chrome-plated brass

Finish
POLISH (.B)

· Collection of bathroom accessories made of chrome-plated brass
· Complements of blown glass
· Nuts and bolts of stainless steel
· Fixing screw to wall using mounting plate system

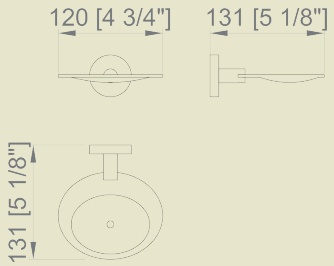

16362.B
36,00 €

Soap dish

Dimensions
48 x 120 x 131 mm



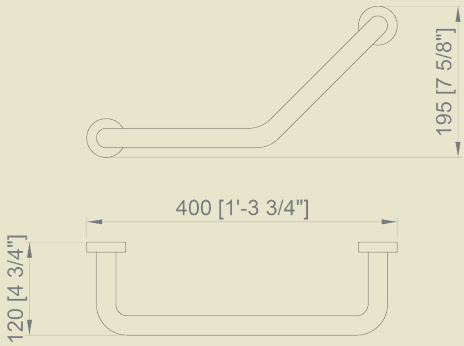

16354.B
52,20 €

Angular handle

Dimensions
195 x 400 x 120 mm
Ø 25 mm



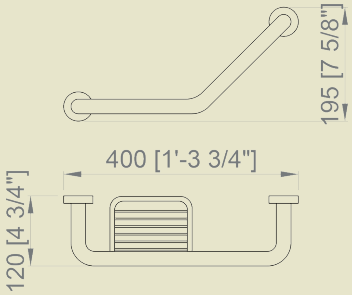

16355.B
65,40 €

Angular handle, tube
Ø 25 mm.
With soap basket

Dimensions
195 x 400 x 120 mm
Ø 25 mm



siena

Material
Chrome-plated brass

Finish
POLISH (.B)

· Collection of bathroom accessories made of chrome-plated brass
· Complements of blown glass
· Nuts and bolts of stainless steel
· Fixing screw to wall using mounting plate system



16356.B

28,10 €

Glass for toothbrush with wall support

Dimensions
50 x 72 x 111 mm

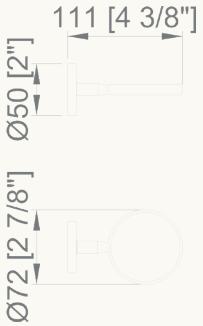



16361.B

46,80 €

Toilet paper roll holder

Dimensions
102 x 128 x 160 mm

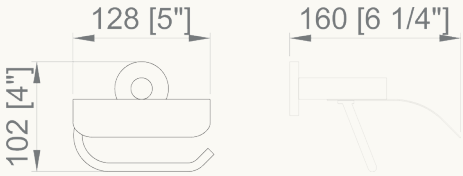



16350.B

22,90 €

Spare toilet paper roll holder

Dimensions
208 x 50 x 100 mm

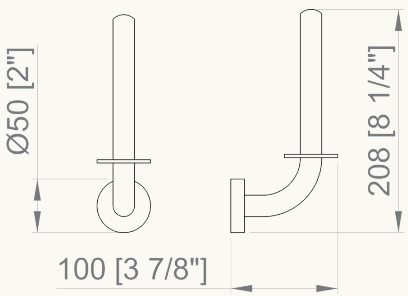

Additional technical information on www.nofer.com

siena

Material
Chrome-plated brass

Finish
POLISH (.B)

· Collection of bathroom accessories made of chrome-plated brass
· Complements of blown glass
· Nuts and bolts of stainless steel
· Fixing screw to wall using mounting plate system

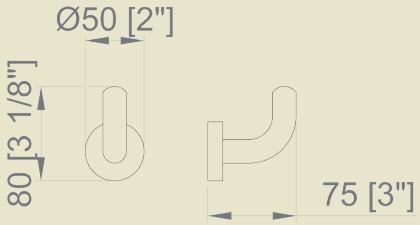

16359.B
19,45 €

Hook

Dimensions
80 x 50 x 75 mm



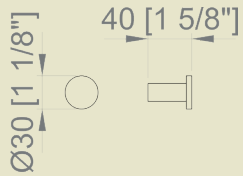

16363.B
14,00 €

Hook

Dimensions
30 x 30 x 40 mm



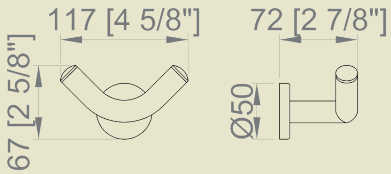

16360.B
26,30 €

Double hook

Dimensions
80 x 50 x 75 mm



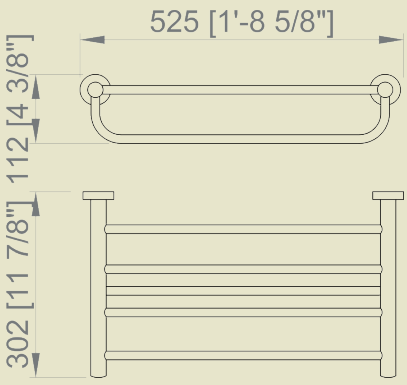

16358.B
122,50 €

Towel rack shelf with bottom bar

Dimensions
112 x 525 x 302 mm





















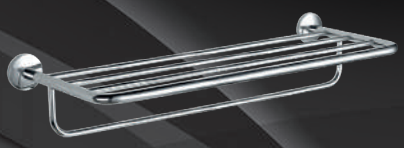

NOFER®


nafa
Monaco
NOFER

monaco

Material
Chrome-plated brass

Finish
POLISH (.B)

· Collection of bathroom accessories made of chrome-plated brass
· Complements of blown glass
· Nuts and bolts of stainless steel
· Fixing screw to wall using mounting plate system



16377.B
28,40 €

Towel ring

Dimensions
202 x 180 x 45 mm
Ø ring tube 9,5 mm

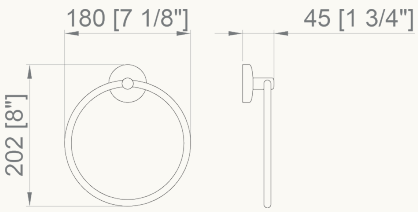



16371.B
44,40 €

Straight bar

Dimensions
54 x 600 x 68 mm
Ø 16 mm

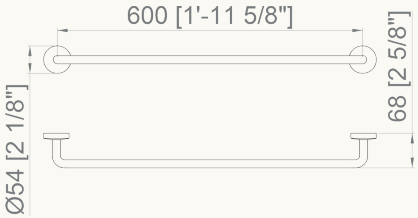



16372.B
24,60 €

Frosted glass soap dish with wall support

Dimensions
55 x 110 x 125 mm

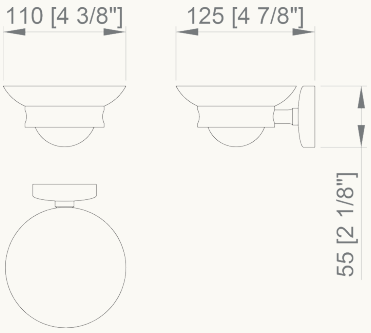



16376.B
23,05 €

Glass of frosted glass for toothbrushes with wall support

Dimensions
95 x 70 x 105 mm

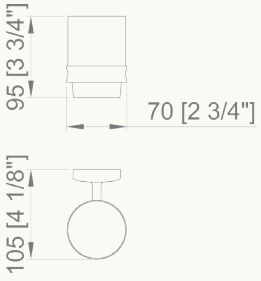



16373.B
18,00 €

Double hook

Dimensions
60 x 100 x 57 mm

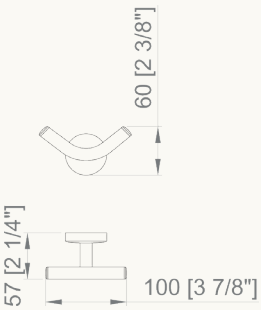

Additional technical information on www.nofer.com

monaco

Material
Chrome-plated brass

Finish
POLISH (.B)

· Collection of bathroom accessories made of chrome-plated brass
· Complements of blown glass
· Nuts and bolts of stainless steel
· Fixing screw to wall using mounting plate system

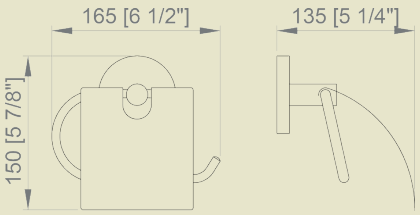

16374.B
40,90 €

Toliet paper roll holder

Dimensions
150 x 165 x 135 mm



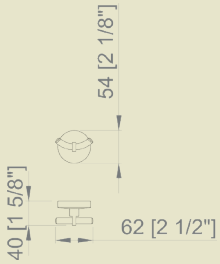

16370.B
18,00 €

Double hook

Dimensions
54 x 62 x 40 mm



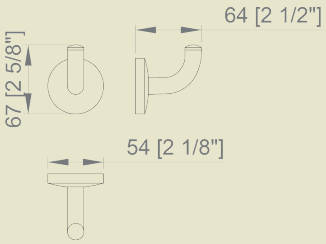

16379.B
16,85 €

Hook

Dimensions
67 x 54 x 64 mm



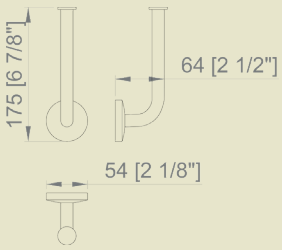

16381.B
22,05 €

Spare toilet paper roll holder

Dimensions
175 x 54 x 64 mm



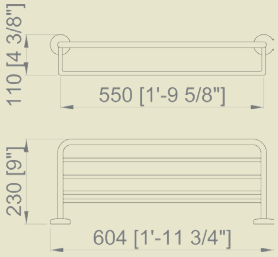

16378.B
109,00 €

Towel rack shelf with bottom bar

Dimensions
110 x 604 x 230 mm

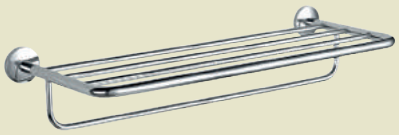

06045.FIX
10,10 €

Bathroom accessories fixing adhesive. Adhesive tube 6 ml



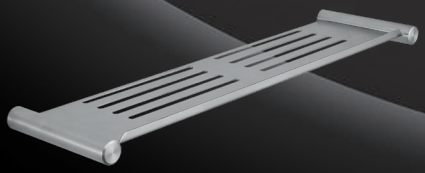



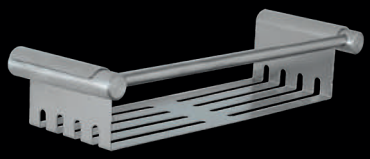







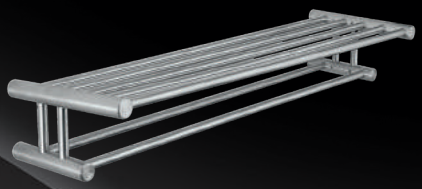

NOFER®

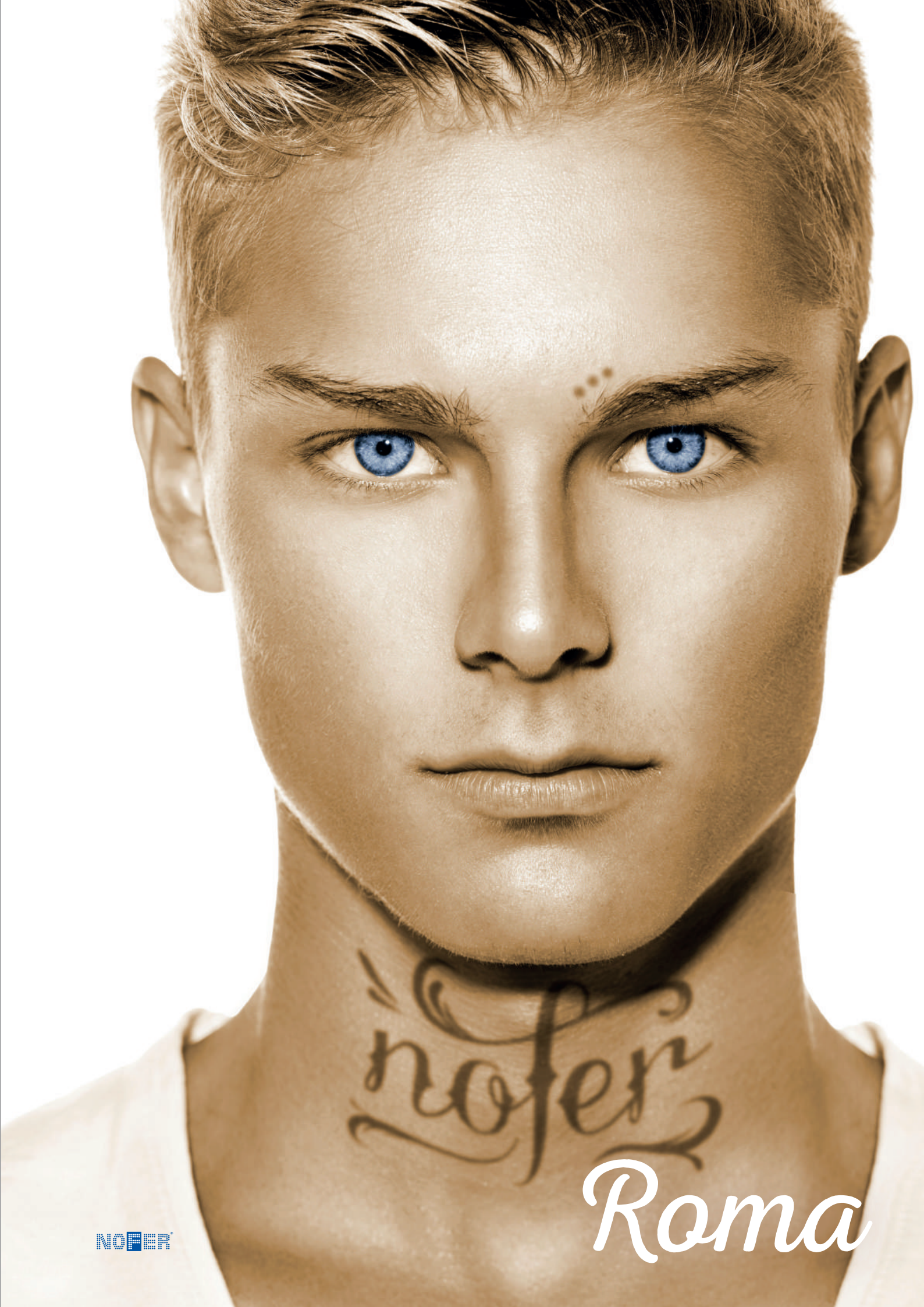
nofer
Roma
NOFER

Material
AISI 304 stainless steel

Finish
SATIN (.S)

roma

· Collection of bathroom accessories made of chrome-plated brass
· Complements of blown glass
· Nuts and bolts of stainless steel
· Fixing screw to wall using mounting plate system



16827.S
21,30 €

Towel ring

Dimensions
187 x 180 x 56 mm
Ø ring tube 12 mm

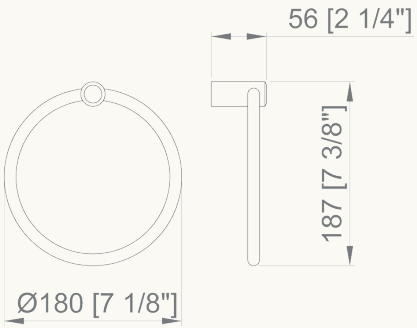

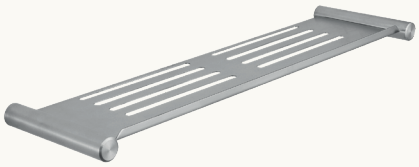

16824.S
47,30 €

Utility shelf

Dimensions
22 x 480 x 132 mm

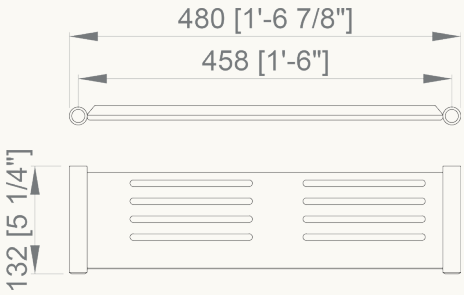



16820.S
22,95 €

Towel bar

Dimensions
22 x 600 x 70 mm
Ø 10 mm

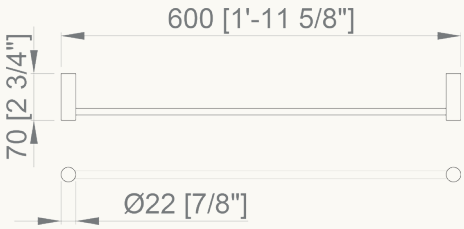

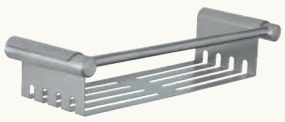

16823.S
45,30 €

Soap basket

Dimensions
122 x 350 x 100 mm

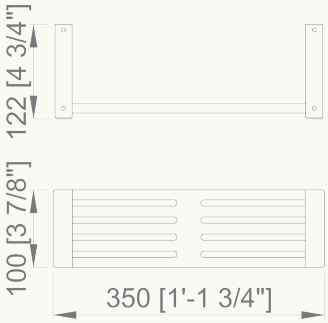



16821.S
16,90 €

Double hook

Dimensions
25 x 55 x 56 mm

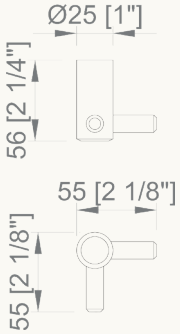

Additional technical information on www.nofer.com

Material
AISI 304 stainless steel

Finish
SATIN (.S)

roma

· Collection of bathroom accessories made of chrome-plated brass
· Complements of blown glass
· Nuts and bolts of stainless steel
· Fixing screw to wall using mounting plate system

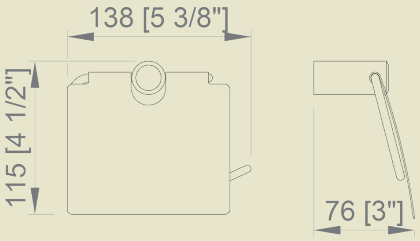

16826.S
23,65 €

Toilet paper roll holder

Dimensions
115 x 138 x 76 mm



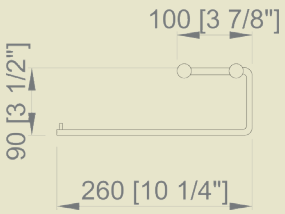

16804.S
57,50 €

Double toilet paper roll holder

Dimensions
260 x 90 x 76 mm

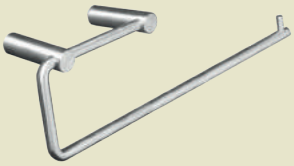

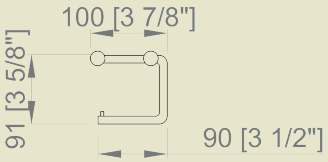

16805.S
84,20 €

Toilet paper roll holder

Dimensions
100 x 90 x 76 mm

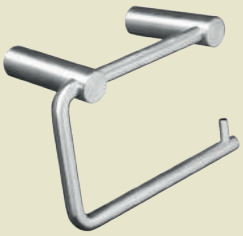

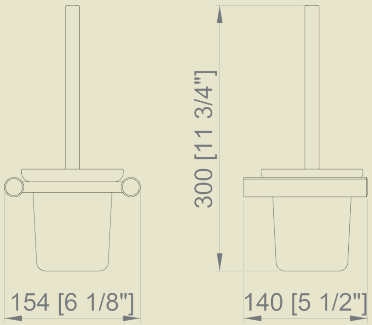

16825.S
40,20 €

Toilet brush holder

Dimensions
300 x 154 x 140 mm



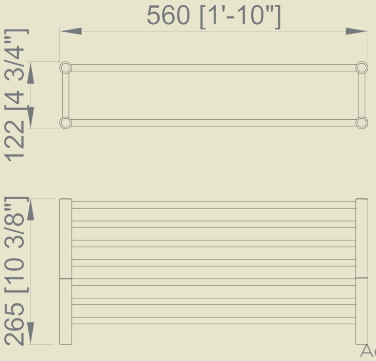

16822.S
90,80 €

Towel rack shelf with double bottom bars

Dimensions
122 x 560 x 265 mm

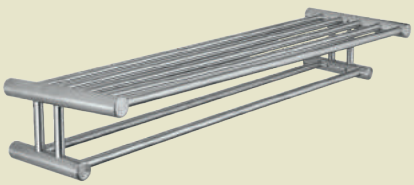













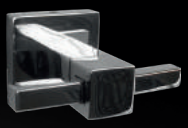

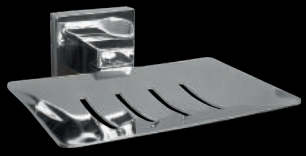







Barcelona

NOFER®

barcelona

Material
AISI 304 stainless steel

Finish
POLISH (.B)

· Collection of bathroom accessories made of chrome-plated brass
· Complements of blown glass
· Nuts and bolts of stainless steel
· Fixing screw to wall using mounting plate system



16905.B
28,90 €

Towel hanger

Dimensions
180 x 184 x 70 mm
Tube 10 x 10 mm

16905.N	OTHER COLORS
85,00 €	**102,00 €**

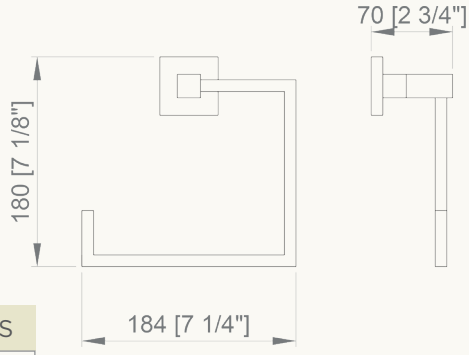

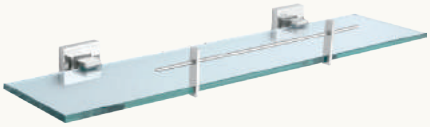

16910.B
51,10 €

Glass shelf

Dimensions
50 x 530 x 152 mm

16910.N	OTHER COLORS
121,10 €	**145,50 €**

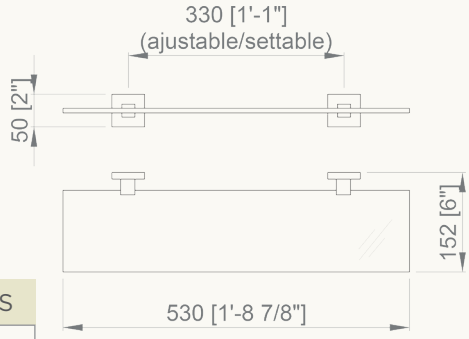



16901.B
40,70 €

Towel bar

Dimensions
50 x 680 x 70 mm
Bar 10 x 10 mm

16901.N	OTHER COLORS
115,00 €	**138,00 €**

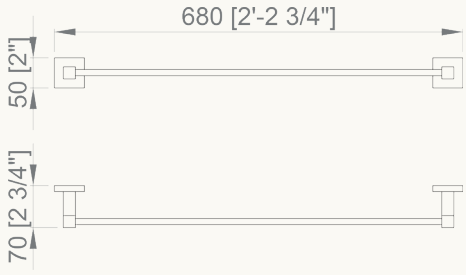

barcelona

Material
AISI 304 stainless steel

Finish
POLISH (.B)

· Collection of bathroom accessories made of chrome-plated brass
· Complements of blown glass
· Nuts and bolts of stainless steel
· Fixing screw to wall using mounting plate system

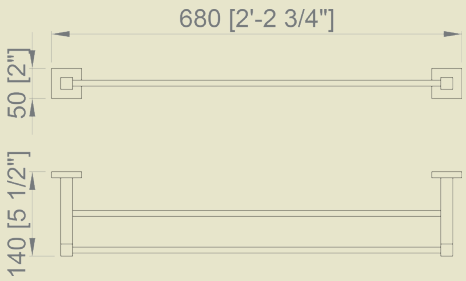

16902.B
51,10 €

Double towel bars

Dimensions
50 x 680 x 140 mm
Tube 10 x 10 mm



16902.N	OTHER COLORS
112,00 €	**134,00 €**

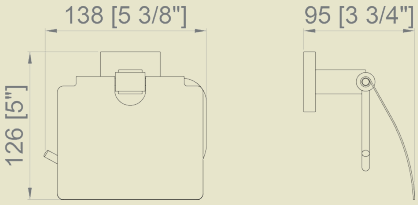

16917.B
39,00 €

Toilet paper roll holder

Dimensions
126 x 138 x 95 mm

NEW



16917.N	OTHER COLORS
98,00 €	**117,50 €**

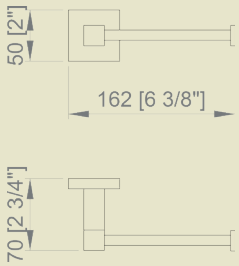

16900.B
24,30 €

Spare toilet paper roll holder

Dimensions
50 x 162 x 70 mm



16900.N	OTHER COLORS
80,60 €	**97,00 €**

barcelona

Material
AISI 304 stainless steel

Finish
POLISH (.B)

· Collection of bathroom accessories made of chrome-plated brass
· Complements of blown glass
· Nuts and bolts of stainless steel
· Fixing screw to wall using mounting plate system



16906.B	
21,50 €	

Hook

Dimensions
60 x 50 x 70 mm

16906.N	OTHER COLORS
69,95 €	84,00 €

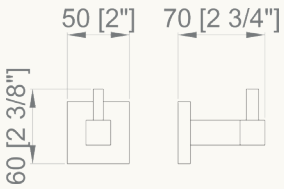



16907.B	
24,30 €	

Double hook

Dimensions
50 x 90 x 70 mm

16907.N	OTHER COLORS
76,15 €	91,40 €

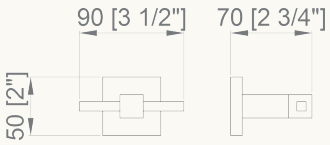

NEW



16911.B	
30,45 €	

Soap dish

Dimensions
50 x 125 x 115 mm

16911.N	OTHER COLORS
82,90 €	99,50 €

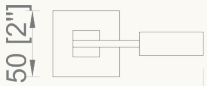





16912.B	
27,65 €	

Soap dish

Dimensions
50 x 125 x 115 mm

16912.N	OTHER COLORS
84,30 €	101,50 €

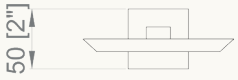

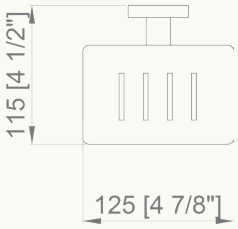

Additional technical information on www.nofer.com

barcelona

Material
AISI 304 stainless steel

Finish
POLISH (.B)

· Collection of bathroom accessories made of chrome-plated brass
· Complements of blown glass
· Nuts and bolts of stainless steel
· Fixing screw to wall using mounting plate system

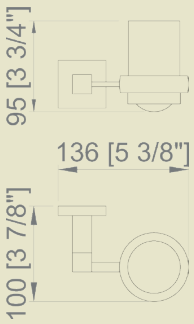

16913.B	29,55 €

Glass for toothbrush with wall support

Dimensions
95 x 136 x 100 mm



16913.N	86,80 €
OTHER COLORS	104,05 €

NEW

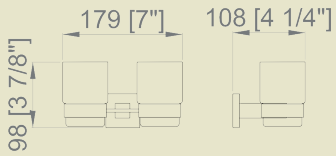

16914.B	38,40 €

Double glass for toothbrush with wall support

Dimensions
95 x 136 x 100 mm



16914.N	100,50 €
OTHER COLORS	120,50 €



16915.B	46,20 €

Toilet brush holder

Dimensions
310 x 158 x 121 mm



16915.N	107,00 €
OTHER COLORS	128,50 €

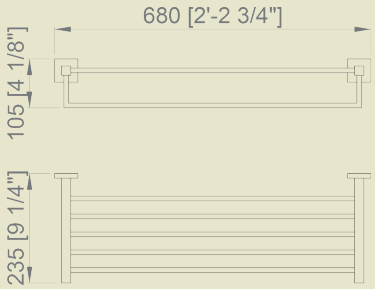

16916.B	94,00 €

Towel rack shelf with bottom bar

Dimensions
105 x 680 x 235 mm

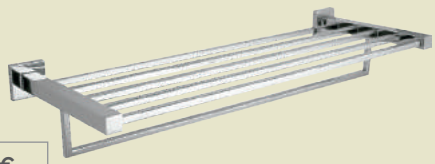

16916.N	164,50 €
OTHER COLORS	197,50 €

06045.FIX
10,10 €

Bathroom accessories fixing adhesive. Adhesive tube 6 ml





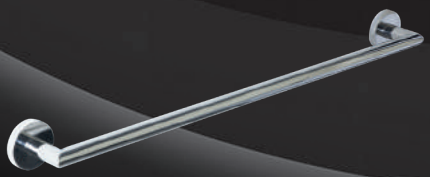



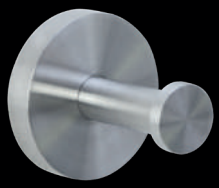











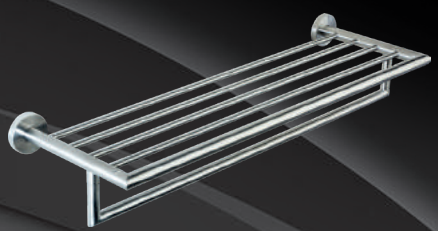

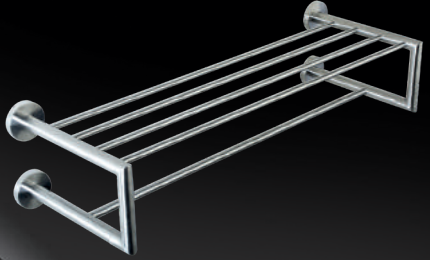



Niza Satin

NOFER

niza satin

Material
AISI 304 stainless steel

Finish
SATIN (.S)

· Collection of bathroom accessories made of chrome-plated brass
· Complements of blown glass
· Nuts and bolts of stainless steel
· Fixing screw to wall using mounting plate system



16860.S
21,45 €

Towel ring

Dimensions
190 x 170 x 50 mm
Ring Ø 10 mm





16856.S
39,30 €

Glass shelf

Dimensions
55 x 600 x 128 mm

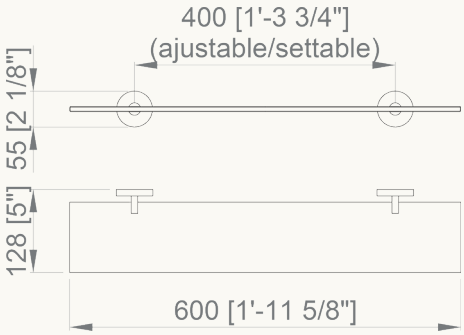



16850.S
31,20 €

Towel bar

Dimensions
55 x 650 x 65 mm
Bar Ø 20 mm

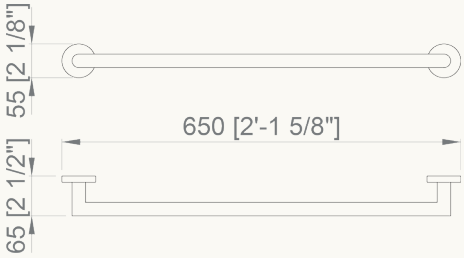

niza satin

Material
AISI 304 stainless steel

Finish
SATIN (.S)

· Collection of bathroom accessories made of chrome-plated brass
· Complements of blown glass
· Nuts and bolts of stainless steel
· Fixing screw to wall using mounting plate system

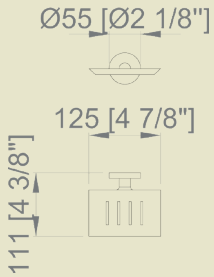

16855.S
22,10 €

Soap dish

Dimensions
55 x 125 x 111 mm



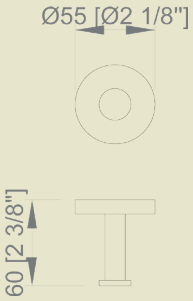

16851.S
16,65 €

Hook

Dimensions
55 x 55 x 60 mm

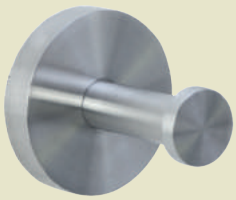



16852.S
17,70 €

Double hook

Dimensions
55 x 55 x 45 mm



niza satin

Material
AISI 304 stainless steel

Finish
SATIN (.S)

· Collection of bathroom accessories made of chrome-plated brass
· Complements of blown glass
· Nuts and bolts of stainless steel
· Fixing screw to wall using mounting plate system



16858.S
24,45 €

Toilet paper roll holder

Dimensions
133 x 138 x 65 mm

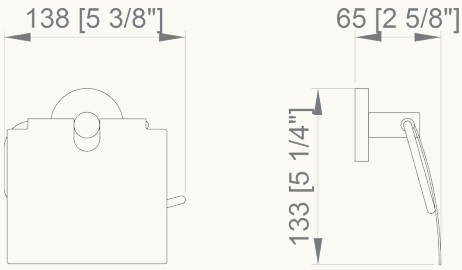



16859.S
21,10 €

Spare toiler paper roll holder

Dimensions
55 x 178 x 65 mm

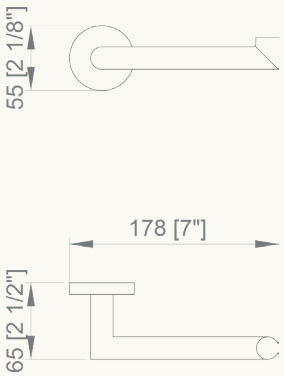



16857.S
32,50 €

Toilet brush holder

Dimensions
310 x 115 x 142 mm

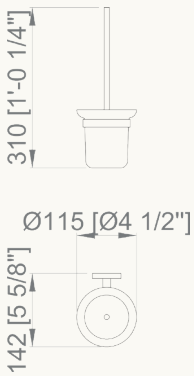

niza satin

Material
AISI 304 stainless steel

Finish
SATIN (.S)

· Collection of bathroom accessories made of chrome-plated brass
· Complements of blown glass
· Nuts and bolts of stainless steel
· Fixing screw to wall using mounting plate system

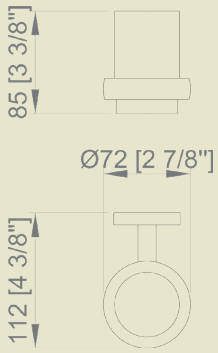

16861.S
23,10 €

Glass for toothbrush with walll support

Dimensions
85 x 72 x 112 mm



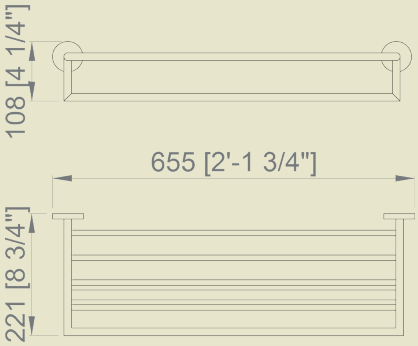

16853.S
78,10 €

Towel rack shelf with bottom bar

Dimensions
108 x 655 x 221 mm

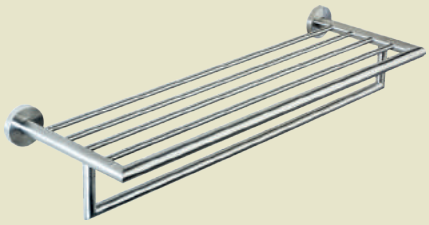

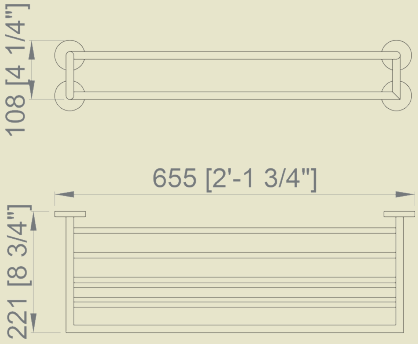

16854.S
76,00 €

Towel rack shelf with bottom bar and four support connections to wall

Dimensions
108 x 655 x 221 mm

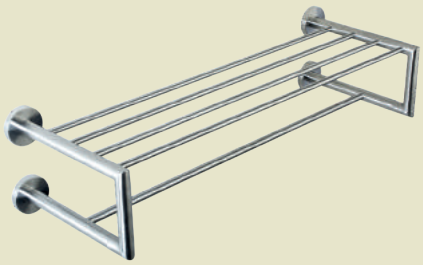

06045.FIX
10,10 €

Bathroom accessories fixing adhesive. Adhesive tube 6 ml



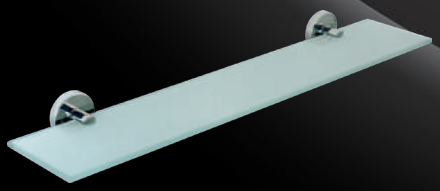

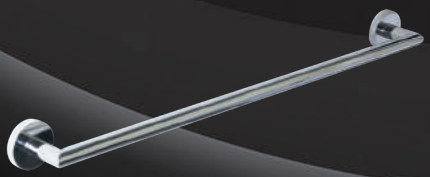















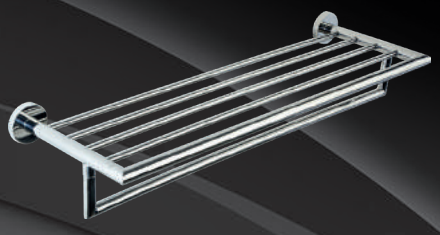

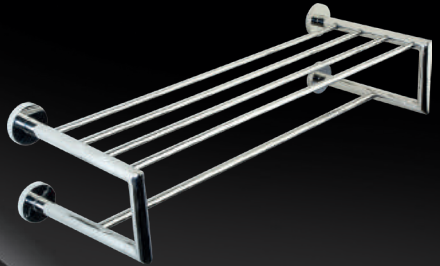


Niza Polish
NOFER

niza polish

Material
AISI 304 stainless steel

Finish
POLISH (.B)

· Collection of bathroom accessories made of chrome-plated brass
· Complements of blown glass
· Nuts and bolts of stainless steel
· Fixing screw to wall using mounting plate system



16860.B
26,40 €

Towel ring

Dimensions
190 x 170 x 50 mm

16860.N
72,00 €

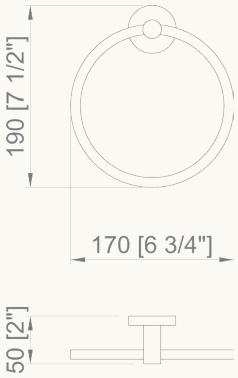

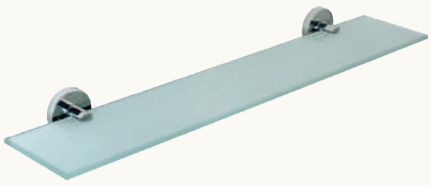

16856.B
48,80 €

Glass shelf

Dimensions
55 x 600 x 128 mm

16856.N
95,20 €

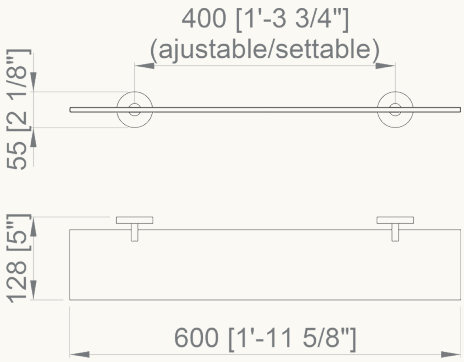



16850.B
40,50 €

Towel bar

Dimensions
55 x 650 x 65 mm
Bar Ø 20 mm

16850.N
84,70 €

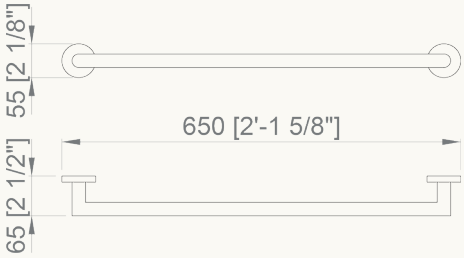

niza polish

Material
AISI 304 stainless steel

Finish
POLISH (.B)

· Collection of bathroom accessories made of chrome-plated brass
· Complements of blown glass
· Nuts and bolts of stainless steel
· Fixing screw to wall using mounting plate system

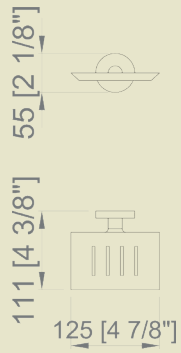

16855.B
31,70 €

Soap dish

Dimensions
55 x 125 x 111 mm

16855.N
75,40 €



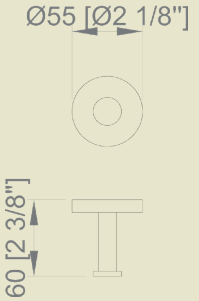

16851.B
25,50 €

Hook

Dimensions
55 x 55 x 60 mm

16851.N
68,10 €



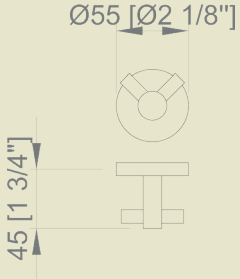

16852.B
24,95 €

Double hook

Dimensions
55 x 55 x 45 mm

16852.N
67,45 €



niza polish

Material
AISI 304 stainless steel

Finish
POLISH (.B)

· Collection of bathroom accessories made of chrome-plated brass
· Complements of blown glass
· Nuts and bolts of stainless steel
· Fixing screw to wall using mounting plate system



16858.B
32,10 €

Toilet paper roll holder

Dimensions
133 x 138 x 65 mm

16858.N
77,20 €

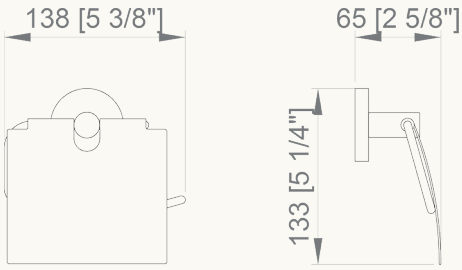



16859.B
26,40 €

Spare toilet paper roll holder

Dimensions
55 x 178 x 65 mm

16859.N
71,60 €

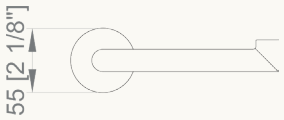

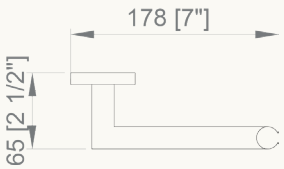



16857.B
40,90 €

Toilet brush holder

Dimensions
310 x 115 x 142 mm

16857.N
87,35 €



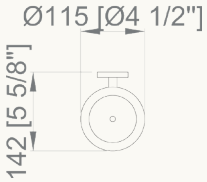

Additional technical information on www.nofer.com

niza polish

Material
AISI 304 stainless steel

Finish
POLISH (.B)

· Collection of bathroom accessories made of chrome-plated brass
· Complements of blown glass
· Nuts and bolts of stainless steel
· Fixing screw to wall using mounting plate system

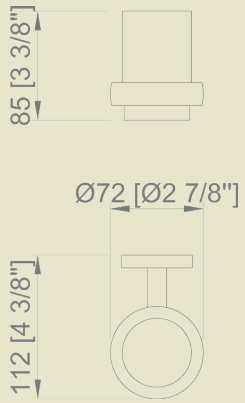

16861.B
25,50 €

Glass for toothbrush with wall support

Dimensions
85 x 72 x 112 mm

16861.N
70,60 €



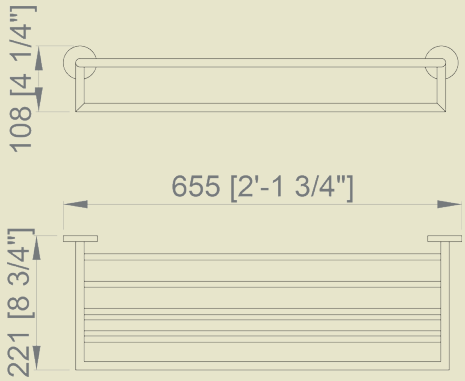

16853.B
116,00 €

Towel rack shelf with bottom bar

Dimensions
108 x 655 x 221 mm

16853.N
170,00 €

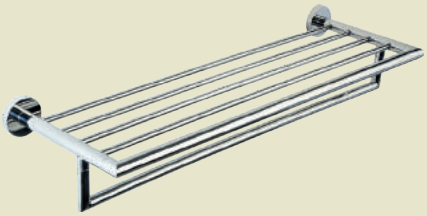

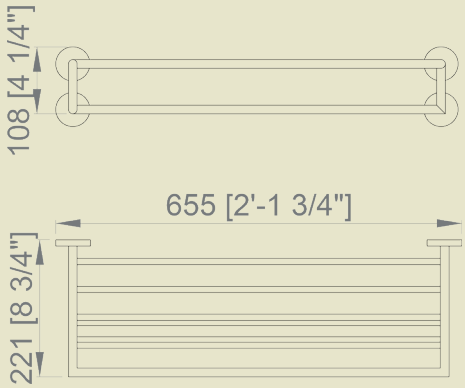

16854.B
111,00 €

Towel rack shelf with bottom bar and 4 conncections to wall

Dimensions
108 x 655 x 221 mm

16854.N
165,00 €

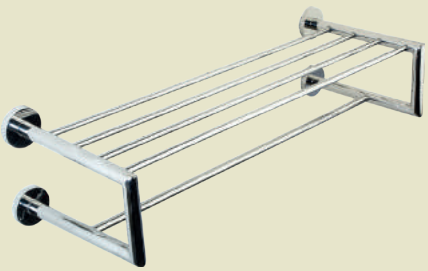

06045.FIX
10,10 €

Bathroom accessories fixing adhesive. Adhesive tube 6 ml





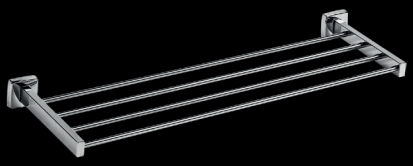
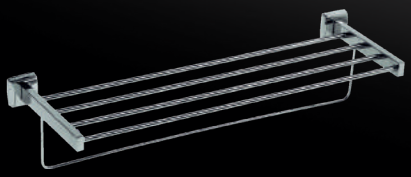
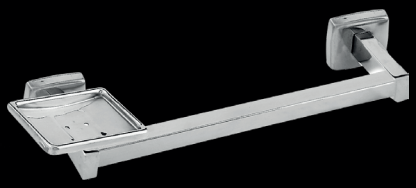


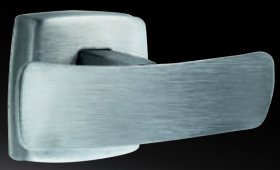




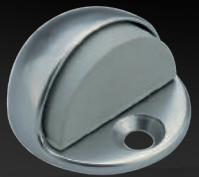

NOFER®


nofer
Classic
NOFER

classic

Material
AISI 304 stainless steel

Finish
SATIN (.S)
POLISH (.B)

· Collection of bathroom accessories made of chrome-plated brass
· Complements of blown glass
· Nuts and bolts of stainless steel
· Fixing screw to wall using mounting plate system



09047.S	09047.B
17,70 €	17,70 €

Towel ring

Dimensions
128 x 132 x 60 mm
Ring Ø 6 mm

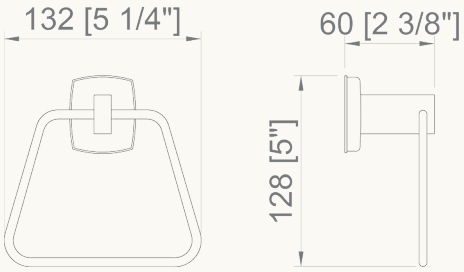



09048.S	09048.B
59,10 €	59,10 €

Utility shelf

Dimensions
50 x 520 x 160 mm





Towel bar

09027.S	09027.B
37,20 €	33,50 €

Dimensions
50 x 450 x 90 mm

09028.S	09028.B
38,10 €	37,50 €

Dimensions
50 x 600 x 90 mm

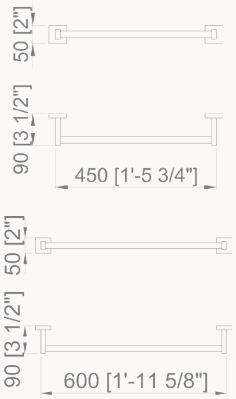



Towel bar

09030.S	09030.B
34,90 €	34,90 €

Dimensions
50 x 450 x 90 mm

09031.S	09031.B
36,40 €	36,40 €

Dimensions
50 x 600 x 90 mm

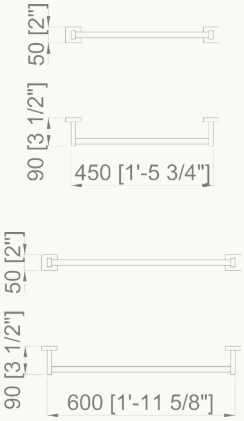

Additional technical information on www.nofer.com

classic

Material
AISI 304 stainless steel

Finish
SATIN (.S)
POLISH (.B)

· Collection of bathroom accessories made of chrome-plated brass
· Complements of blown glass
· Nuts and bolts of stainless steel
· Fixing screw to wall using mounting plate system

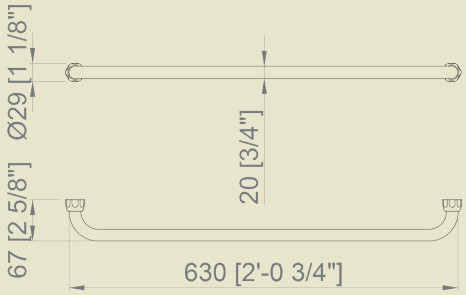

09025.B
38,60 €

Towel bar

Dimensions
29 x 630 x 67 mm
Bar Ø 20 mm



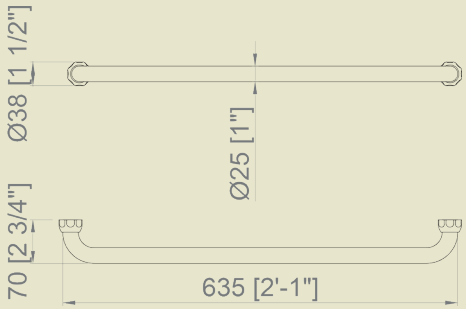

09026.B
58,90 €

Towel bar

Dimensions
38 x 635 x 70 mm
Bar Ø 25 mm



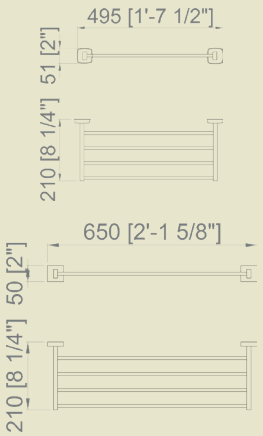

Towel rack shelf

09033.B
55,20 €

Dimensions
51 x 495 x 210 mm
Bar Ø 18 mm

09034.B
51,80 €

Dimensions
50 x 650 x 210 mm
Bar Ø 18 mm

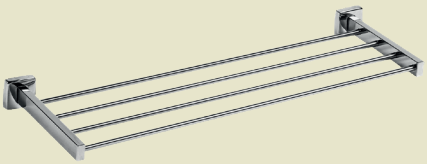

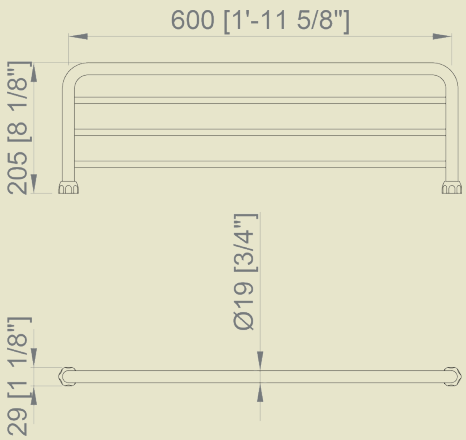

09024.B
57,50 €

Towel rack shelf

Dimensions
29 x 600 x 205 mm

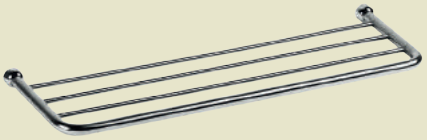

classic

Material
Stainless steel

Finish
SATIN (.S)
POLISH (.B)

· Collection of bathroom accessories made of chrome-plated brass
· Complements of blown glass
· Nuts and bolts of stainless steel
· Fixing screw to wall using mounting plate system

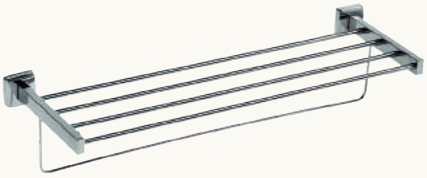

09036.S	09036.B
58,00 €	59,30 €

Towel rack with bottom bar

Dimensions
140 x 600 x 210 mm

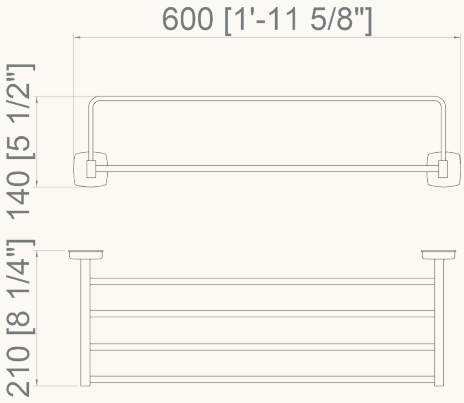

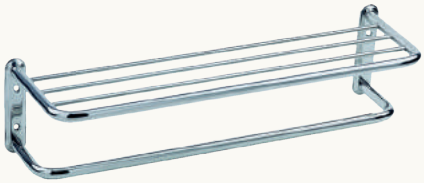

09023.S	09023.B
72,80 €	82,20 €

Towel rack shelf with bottom bar anf four connections to wall

Dimensions
164 x 650 x 205 mm

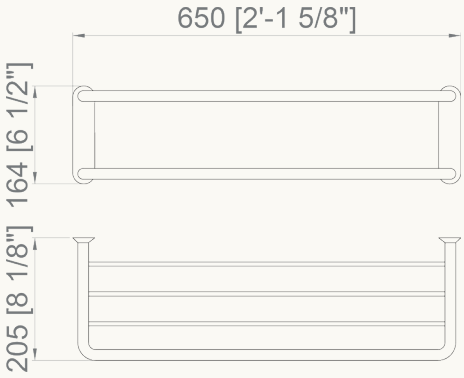



09046.SJ.B
44,00 €

Angular handle. Without soap basket, reversible position

Dimensions
170 x 443 x 112 mm
Bar Ø 25 mm

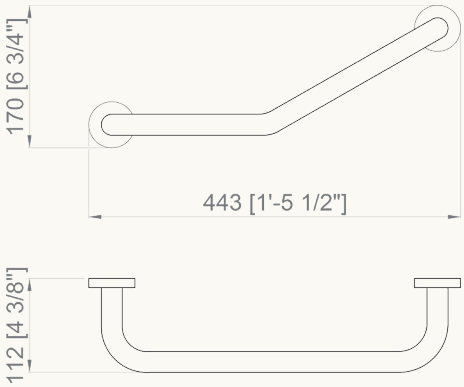

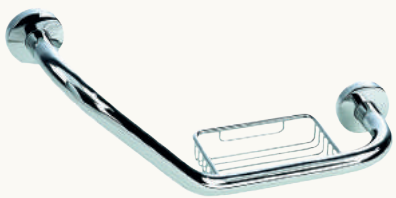

09046.B
57,90 €

Angular handle. With soap basket, reversible position

Dimensions
170 x 443 x 112 mm
Bar Ø 25 mm

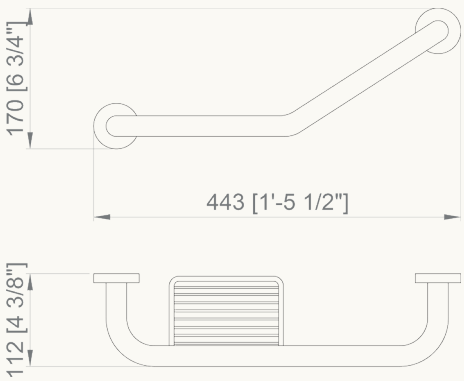

classic

Material
Stainless steel

Finish
SATIN (.S)
POLISH (.B)

· Collection of bathroom accessories made of chrome-plated brass
· Complements of blown glass
· Nuts and bolts of stainless steel
· Fixing screw to wall using mounting plate system

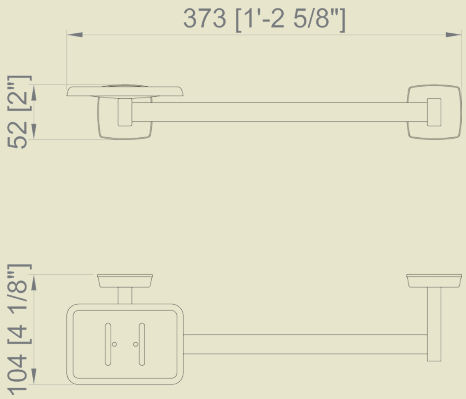

09045.B
26,00 €

Towel bar with soap dish

Dimensions
52 x 373 x 104 mm

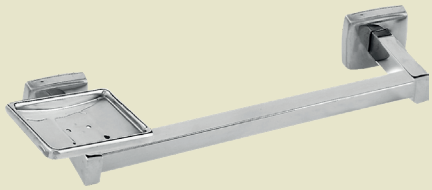

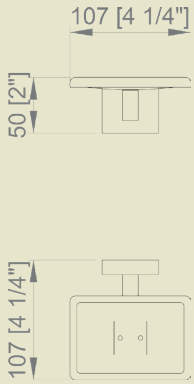

09044.S
15,10 €

09044.B
15,10 €

Soap dish

Dimensions
50 x 107 x 107 mm



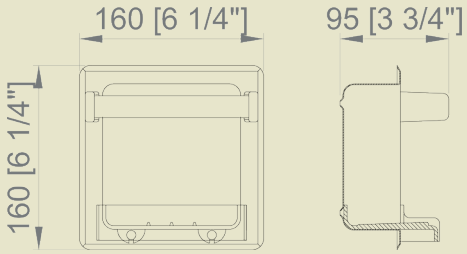

09037.B
31,50 €

Soap dish

Dimensions
160 x 160 x 95 mm



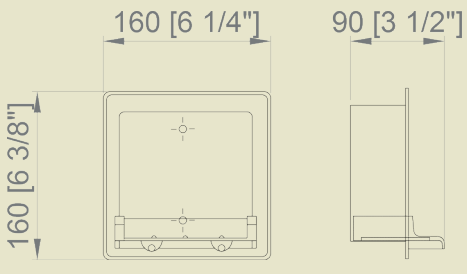

09038.B
27,80 €

Soap dish

Dimensions
160 x 160 x 90 mm



classic

Material
Stainless steel

Finish
SATIN (.S)
POLISH (.B)

· Collection of bathroom accessories made of chrome-plated brass
· Complements of blown glass
· Nuts and bolts of stainless steel
· Fixing screw to wall using mounting plate system



09016.S	09016.B
10,90 €	11,35 €

Hook

Dimensions
50 x 50 x 50 mm

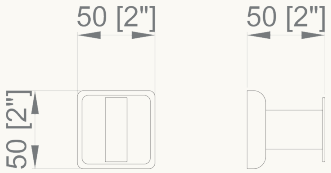

NEW

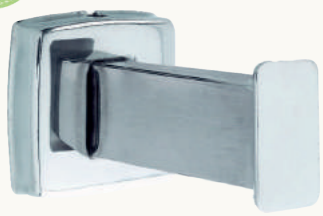

09016.85.S	09016.85.B
12,80 €	12,80 €

Hook

Dimensions
50 x 50 x 85 mm

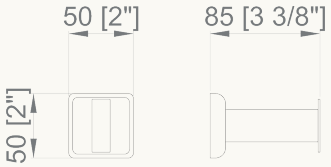

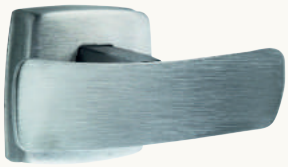

09017.S	09017.B
12,20 €	12,40 €

Hook

Dimensions
50 x 100 x 40 mm





09018.S	09018.B
13,40 €	13,40 €

Hook

Dimensions
50 x 57 x 48 mm

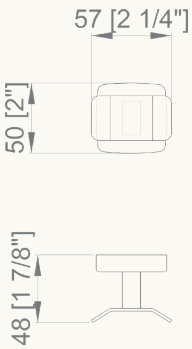

classic

Material
Stainless steel

Finish
SATIN (.S)
POLISH (.B)

· Collection of bathroom accessories made of chrome-plated brass
· Complements of blown glass
· Nuts and bolts of stainless steel
· Fixing screw to wall using mounting plate system

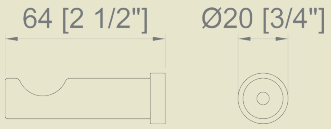

09019.S	09019.B
23,35 €	**22,30 €**

Hook

Dimensions
Ø 20 mm x 64 mm



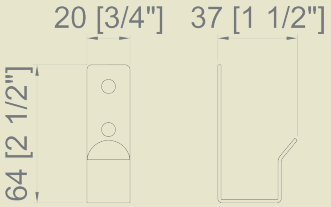

09015.S
9,10 €

Individual hook

Dimensions
64 x 20 x 37 mm



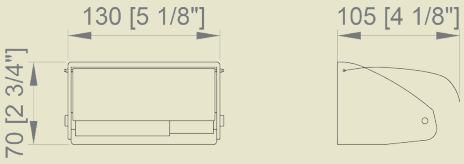

05013.S	05013.B
15,10 €	**14,05 €**

Toilet paper roll holder

Dimensions
70 x 130 x 105 mm





09058.B
23,40 €

Retractable clothesline (2m)

Dimensions
Ø 90 mm x 55 mm



Finish
SATIN (.S)
POLISH (.B)

classic

· Collection of bathroom accessories made of chrome-plated brass
· Complements of blown glass
· Nuts and bolts of stainless steel
· Fixing screw to wall using mounting plate system



09107.W
7,05 €

Toilet brush holder

Material
WHITE ABS

Dimensions
50 x 162 x 85 mm

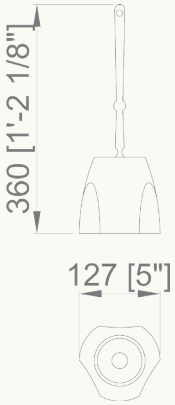



09059.S
27,65 €

09059.B
27,05 €

Toilet brush holder with wall support

Material
Stainless steel

Dimensions
337 mm, Ø 100 mm





04024.B
35,90 €

Paper tissues dispenser on surface

Material
Zamac

Dimensions
145 x 270 x 50 mm

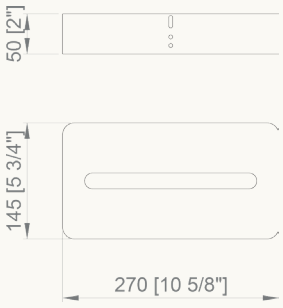

classic

Material
Stainless steel

Finish
SATIN (.S)
POLISH (.B)

· Collection of bathroom accessories made of chrome-plated brass
· Complements of blown glass
· Nuts and bolts of stainless steel
· Fixing screw to wall using mounting plate system

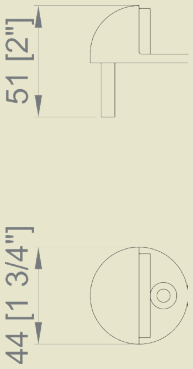

16051.2.S
9,75 €

Door stop

Material
Zamac

Dimensions
26 mm, Ø 44 mm



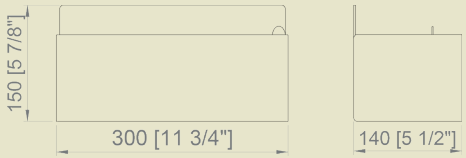

Wall ashtray

14161.S
99,10 €

Dimensions
150 x 300 x 140 mm

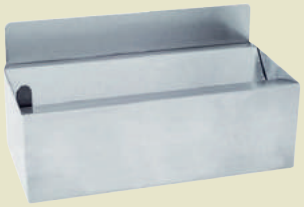

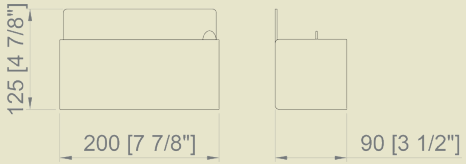

14162.S
58,80 €

Dimensions
125 x 200 x 90 mm

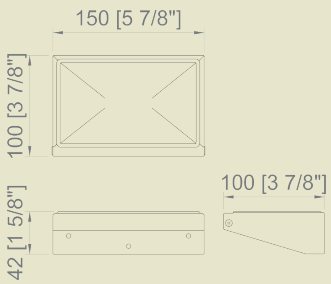

14160.B
13,80 €

Wall ashtray with pivoting tray for easy emptying

Dimensions
42 x 115 x 100 mm




NOFER


nofer
Hotel
NOFER

hotel

Material
Zamac

Finish
POLISH (.B)

· Collection of bathroom accessories made of chrome-plated brass
· Complements of blown glass
· Nuts and bolts of stainless steel
· Fixing screw to wall using mounting plate system



16407.B
10,90 €

Towel ring

Dimensions
190 x 155 x 45 mm
Bar Ø 6,5 mm

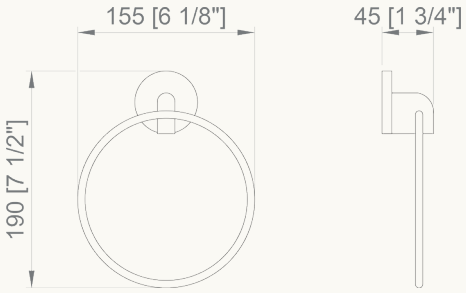



16415.B
27,05 €

Glass shelf

Dimensions
54 x 582 x 104 mm

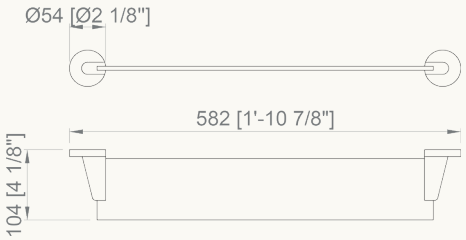



16410.B
14,30 €

Glass for toothbrush with wall support

Dimensions
95 x 67 x 115 mm

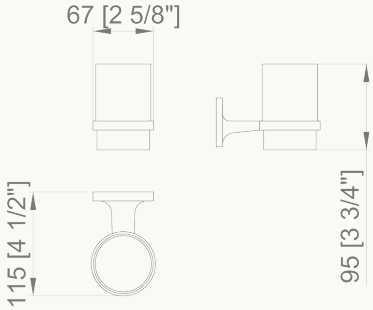

Towel bar

16401.B
18,20 €

Dimensions
55 x 504 x 80 mm



16402.B
19,50 €

Dimensions
55 x 654 x 80 mm

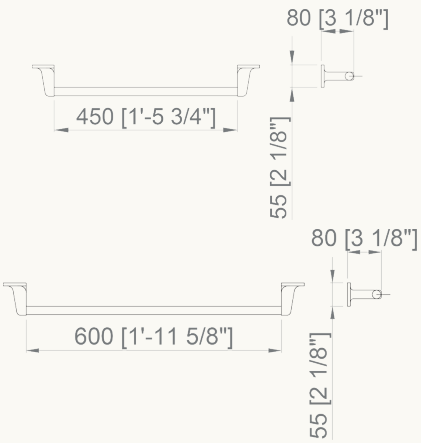

Additional technical information on www.nofer.com

hotel

Material
Zamac

Finish
POLISH (.B)

· Collection of bathroom accessories made of chrome-plated brass
· Complements of blown glass
· Nuts and bolts of stainless steel
· Fixing screw to wall using mounting plate system

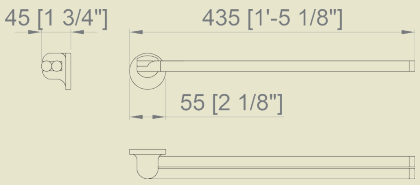

16408.B
27,80 €

Folding double towel bars

Dimensions
55 x 435 x 45 mm



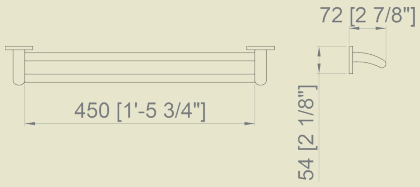

Double towel rack

16404.B
42,70 €

Dimensions
54 x 450 x 72 mm

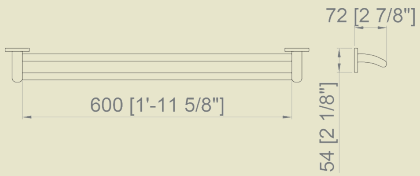

16405.B
33,10 €

Dimensions
54 x 600 x 72 mm

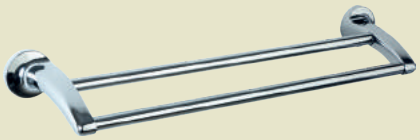

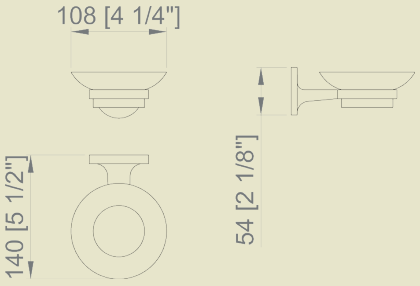

16413.B
13,80 €

Glass soap dish with wall support

Dimensions
54 x 108 x 140 mm



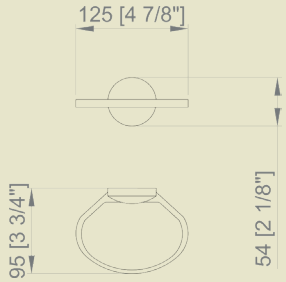

16412.B
11,15 €

Soap dish

Dimensions
54 x 125 x 95 mm



hotel

Material
Zamac

Finish
POLISH (.B)

· Collection of bathroom accessories made of chrome-plated brass
· Complements of blown glass
· Nuts and bolts of stainless steel
· Fixing screw to wall using mounting plate system

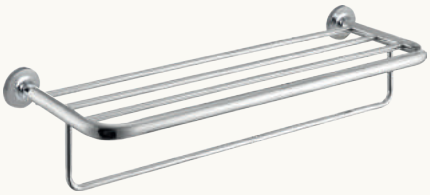

16406.B
58,80 €

Towel rack shelf with lower bar

Dimensions
119 x 655 x 206 mm

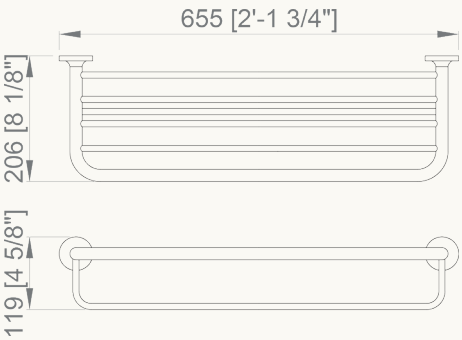



16409.B
7,05 €

Hook

Dimensions
Ø 55 mm, 45 mm





16419.B
8,60 €

Double hook

Dimensions
Ø 55 mm, 45 mm

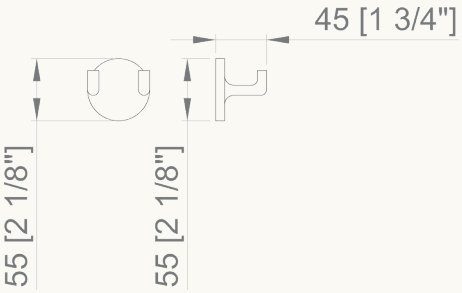



16418.B
24,45 €

Toilet brush holder, white ceramic container

Dimensions
425 x 110 x 138 mm



Additional technical information on www.nofer.com

hotel

Material
Zamac

Finish
POLISH (.B)

· Collection of bathroom accessories made of chrome-plated brass
· Complements of blown glass
· Nuts and bolts of stainless steel
· Fixing screw to wall using mounting plate system

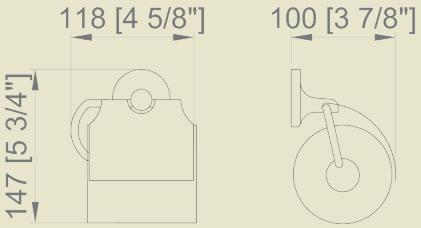

16417.B

21,30 €

Toilet paper roll holder with lid

Dimensions
147 x 118 x 100 mm



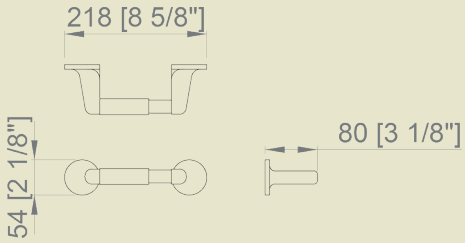

16416.B

17,40 €

Toilet paper roll holder without cover

Dimensions
54 x 218 x 80 mm



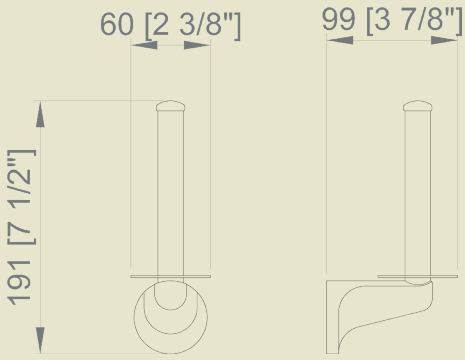

16411.B

26,50 €

Spare toilet paper roll holder

Dimensions
191 x 60 x 99 mm





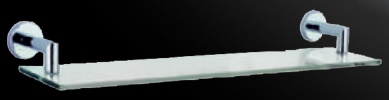

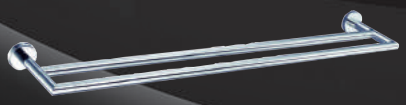



















NOFER®


nofer
NOFER
Line

line

Material
Zamac

Finish
SATIN (.S)
POLISH (.B)
WHITE (.W)

· Collection of bathroom accessories made of chrome-plated brass
· Complements of blown glass
· Nuts and bolts of stainless steel
· Fixing screw to wall using mounting plate system



16504.S	16504.B
33,20 €	37,10 €
16504.W	
23,90 €	

Towel ring

Dimensions
187 x 150 x 65 mm
Bar Ø 9 mm

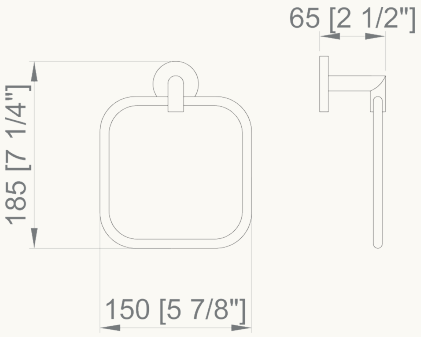



16515.S	16515.B
39,10 €	43,20 €
16515.W	
36,40 €	

Glass shelf

Dimensions
58 x 500 x 120 mm

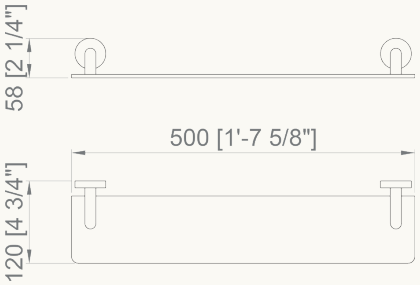



16509.S	16509.B
59,50 €	55,90 €
16509.W	
41,20 €	

Double towel rack

Dimensions
45 x 450 x 126 mm

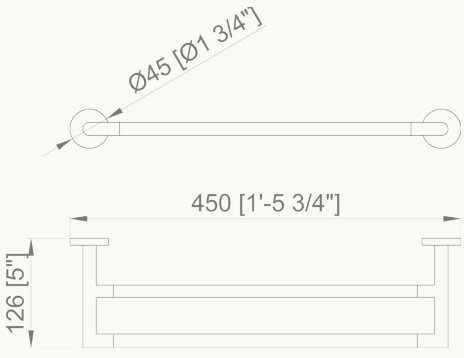

line

· Collection of bathroom accessories made of chrome-plated brass
· Complements of blown glass
· Nuts and bolts of stainless steel
· Fixing screw to wall using mounting plate system

Material
Zamac

Finish
SATIN (.S)
POLISH (.B)
WHITE (.W)

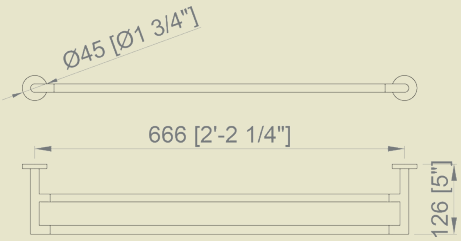

16510.B	16510.W
54,20 €	**44,80 €**

Double towel rack

Dimensions
45 x 666 x 126 mm
Bar Ø 14 mm



Towel bar

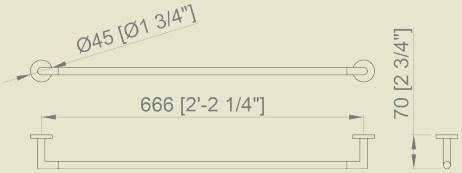

16501.S	16501.B
36,50 €	**34,60 €**

Dimensions
45 x 666 x 70 mm

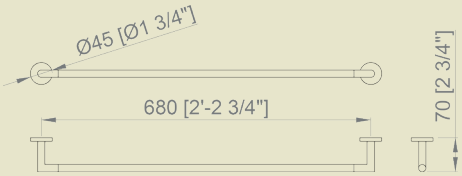

16502.S	16502.B
37,20 €	**35,20 €**

16502.W
30,20 €

Dimensions
45 x 680 x 70 mm



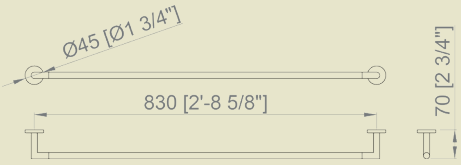

16503.B
37,90 €

Dimensions
45 x 830 x 70 mm



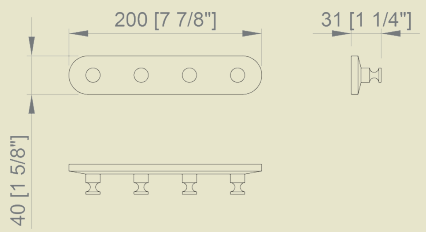

16507.B	16507.W
21,30 €	**18,60 €**

Hanger with four hooks

Dimensions
40 x 200 x 31 mm



line

· Collection of bathroom accessories made of chrome-plated brass
· Complements of blown glass
· Nuts and bolts of stainless steel
· Fixing screw to wall using mounting plate system

Material
Zamac

Finish
SATIN (.S)
POLISH (.B)
WHITE (.W)



16508.B
74,20 €

Hanger with seven hooks

Dimensions
27 x 540 x 45 mm

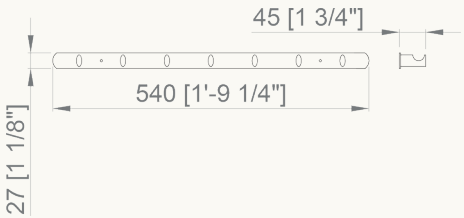



16506.B
13,30 €

Hook

Dimensions
58 x 45 x 67 mm

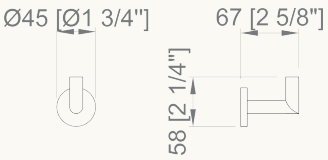

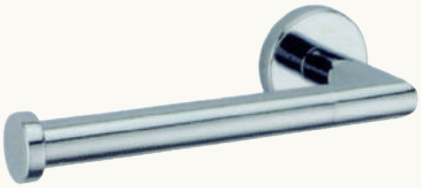

16505.S
26,90 €

16505.B
24,40 €

16505.W
23,80 €

Spare toliet paper holder

Dimensions
45 x 165 x 70 mm

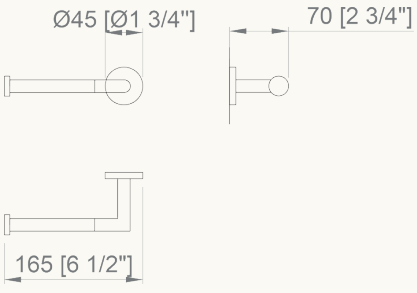

line

Material
Zamac

Finish
SATIN (.S)
POLISH (.B)
WHITE (.W)

· Collection of bathroom accessories made of chrome-plated brass
· Complements of blown glass
· Nuts and bolts of stainless steel
· Fixing screw to wall using mounting plate system

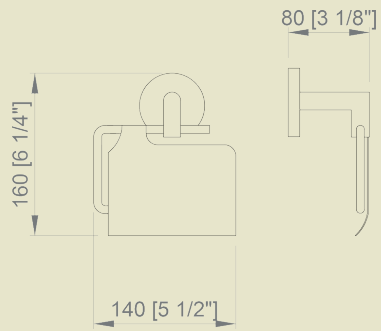

16500.S	16500.B
33,90 €	**26,60 €**

16500.W
20,30 €

Toilet paper roll holder

Dimensions
160 x 140 x 80 mm



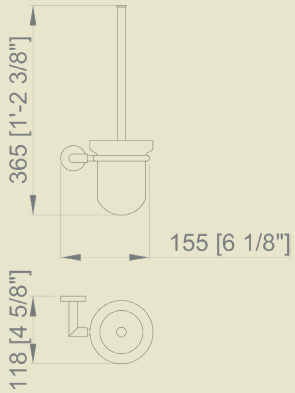

16518.S	16518.B
45,90 €	**46,30 €**

16518.W
34,20 €

Toilet brush holder

Dimensions
365 x 155 x 118 mm



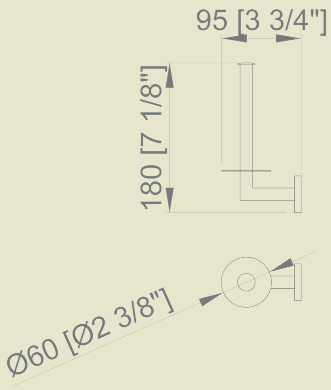

16519.S	16519.B
36,70 €	**38,90 €**

16519.W
32,90 €

Spare toilet paper holder

Dimensions
180 x 60 x 95 mm



06045.FIX
10,10 €

Bathroom accessories fixing adhesive. Adhesive tube 6 ml



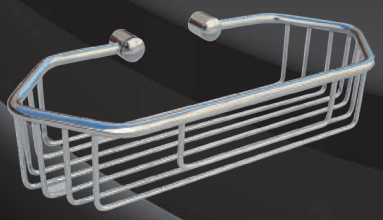



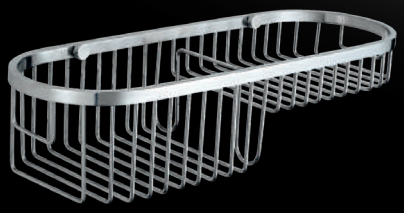

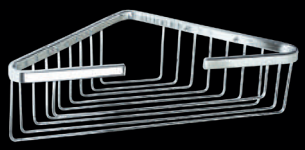



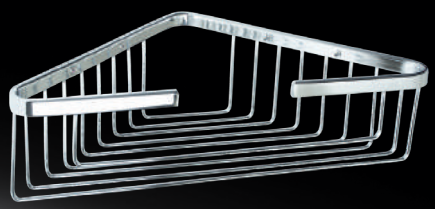

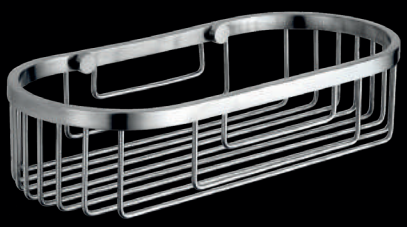

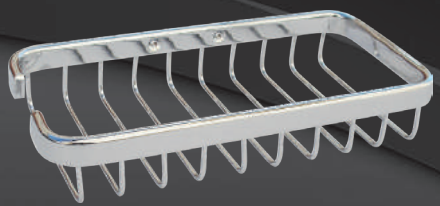

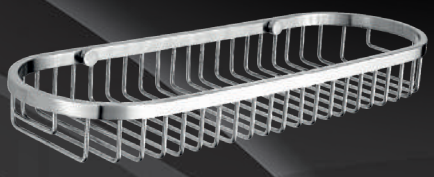

NOFER®


Soap
NOFER

soapbaskets

Material
Chrome-plated brass

Finish
POLISH (.B)

· Collection of bathroom accessories made of chrome-plated brass
· Complements of blown glass
· Nuts and bolts of stainless steel
· Fixing screw to wall using mounting plate system



09054.B
40,80 €

Rectangular soap basket

Dimensions
92 x 259 x 124 mm

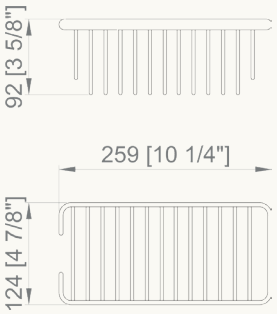



09055.B
23,90 €

Rectangular soap basket

Dimensions
33 x 152 x 125 mm

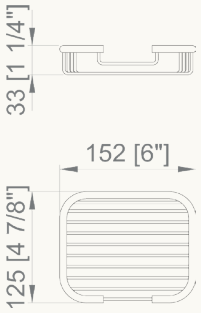

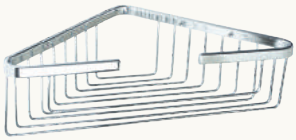

09052.B
33,60 €

Triangular soap basket

Dimensions
48 x 215 x 142 mm

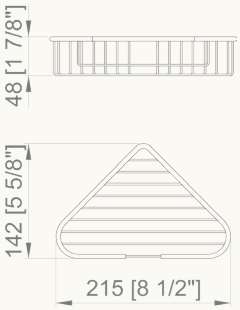

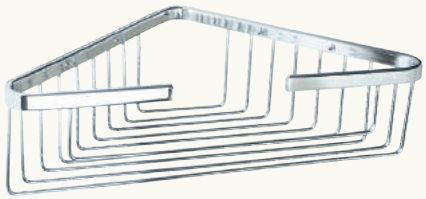

09053.B
67,60 €

Triangular soap basket

Dimensions
90 x 340 x 205 mm

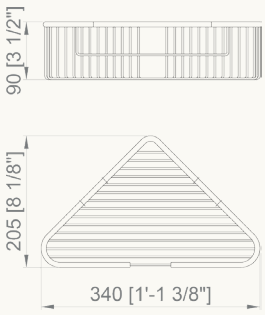

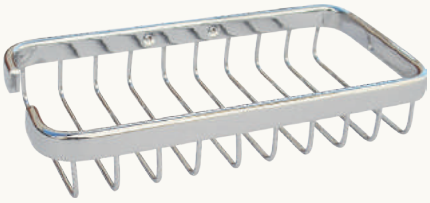

09056.B
28,70 €

Rectangular soap basket

Dimensions
35 x 218 x 108 mm

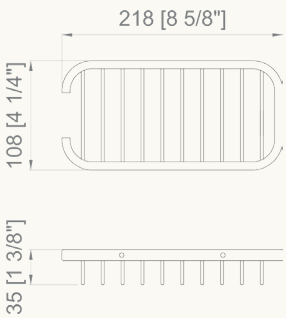

soapbaskets

Material
Stainless steel

Finish
SATIN (.S)
POLISH (.B)

· Collection of bathroom accessories made of chrome-plated brass
· Complements of blown glass
· Nuts and bolts of stainless steel
· Fixing screw to wall using mounting plate system

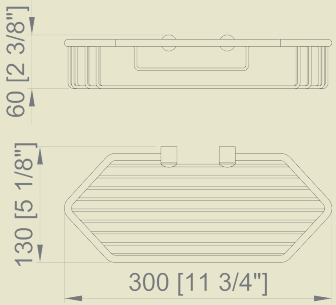

09057.B
69,10 €

Rectangular soap basket

Dimensions
60 x 300 x 130 mm

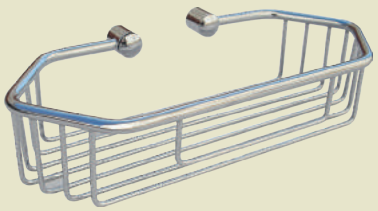

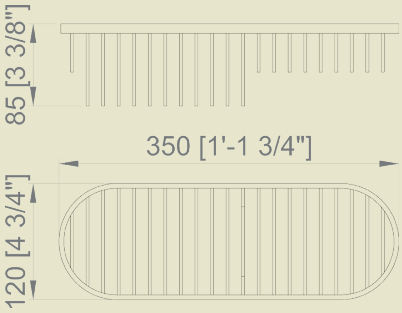

09062.B
40,60 €

Rectangular soap basket

Dimensions
85 x 350 x 120 mm

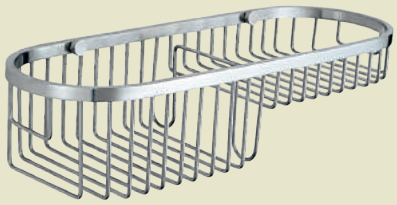

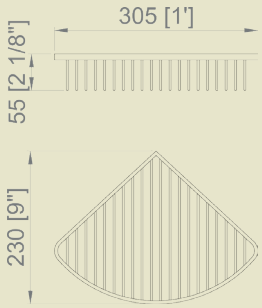

09063.S
47,00 €

09063.B
45,80 €

Triangular soap basket

Dimensions
55 x 305 x 230 mm



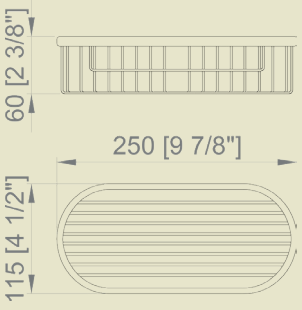

09064.S
40,00 €

09064.B
33,80 €

Rectangular soap basket

Dimensions
60 x 250 x 115 mm

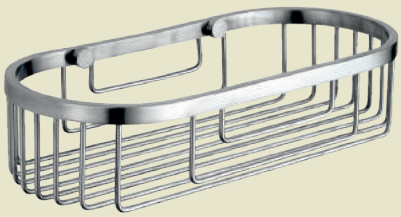

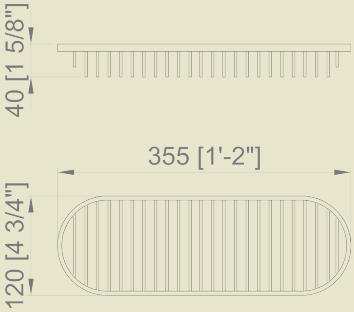

09065.B
64,20 €

Rectangular soap basket

Dimensions
40 x 355 x 120 mm

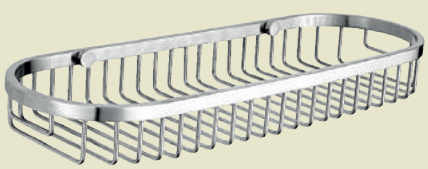



Complements

NOFER®

Finish
SATIN (.S)
POLISH (.B)
WHITE (.W)

complements

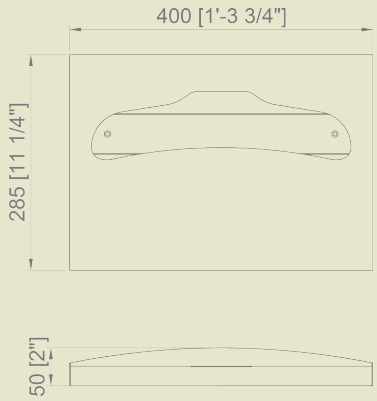

04026.2.S

85,80 €

Toilet rings dispenser

Material
AISI 304 stainless steel

Dimensions
285 x 400 x 50 mm

Capacity
200 - 250 uses

NEW

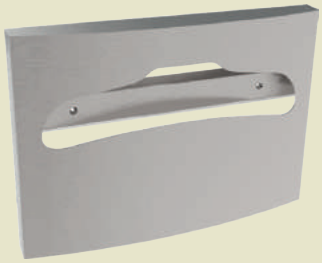

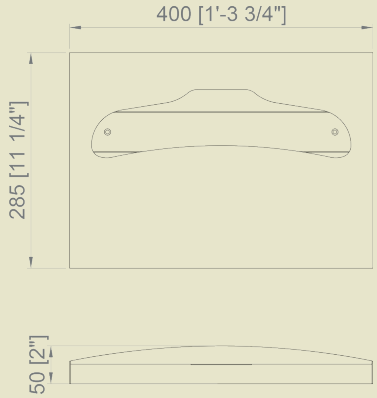

04026.2.B

85,80 €

Toilet rings dispenser

Material
Chrome-plated steel

Dimensions
285 x 400 x 50 mm

Capacity
250 uses

NEW



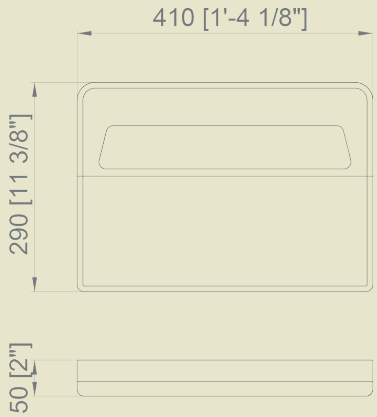

04026.2.W

25,50 €

Toilet rings dispenser

Material
ABS

Dimensions
290 x 410 x 50 mm

Capacity
200 - 250 uses

NEW



Finish
SATIN (.S)
POLISH (.B)

complements



04049.B.2
11,70 €

Hygienic bag dispenser

Material
Chrome-plated ABS

Dimensions
138 x 100 x 28 mm

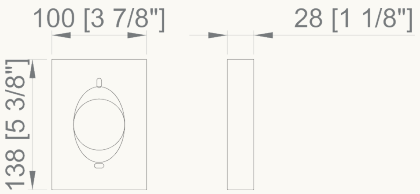



04050.S	04050.B
20,90 €	**20,90 €**

Hygienic bag dispenser

Material
Stainless steel

Dimensions
135 x 97 x 25 mm

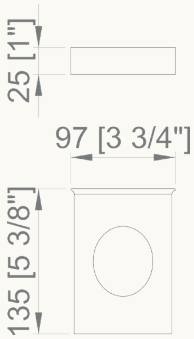



04024.B
35,90 €

Wall mounted tissue paper dispenser

Material
Chrome-plated ABS

Dimensions
145 x 270 x 50 mm

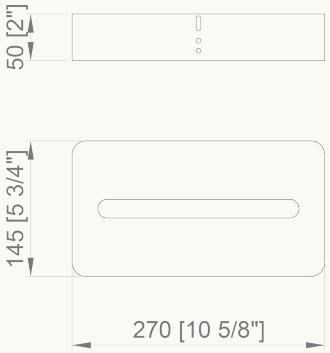



18010.T
25,90 €

Electronic personal scale

Material
Tempered glass base

Dimensions
145 x 270 x 50 mm

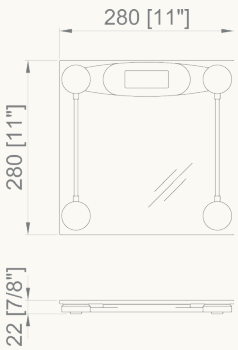

Additional technical information on www.nofer.com

complements

NEW

Self-adhesive pictograms

Material
AISI 304 stainless steel

Finish
SATIN

Dimensions
100 x 100 mm



16722.2.S
13,90 €



16721.2.S
13,90 €



16720.2.S
13,90 €



16724.2.S
13,90 €



16723.2.S
13,90 €



16730.2.S
13,90 €

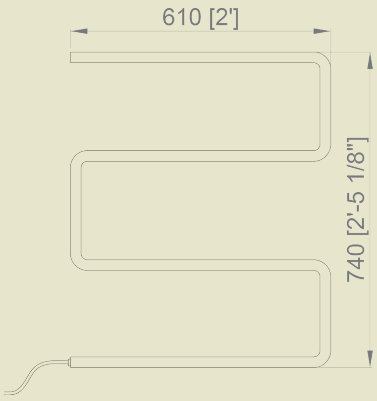

18002.B **139,20 €**

Electric towel rail

Material
Stainless steel

Finish
POLISH

Power
65 W with plug

Dimensions
750 x 610 x 85 mm
Ø tube 25 mm

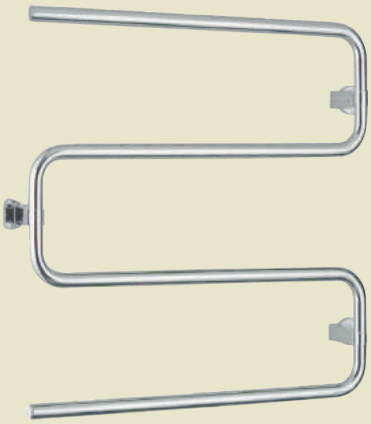

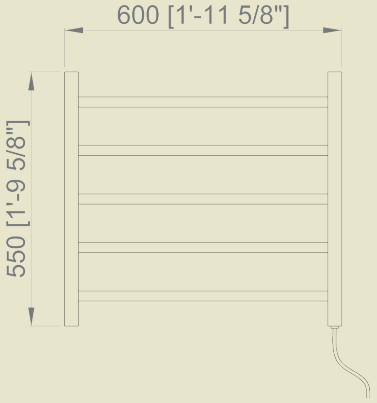

18003.B **195,00 €**

Electric towel rack with
ON/OFF switch

Material
Stainless steel

Finish
POLISH

Power
65 W with plug

Dimensions
550 x 600 x 120 mm
Ø tube 32-22 mm



Finish
SATIN (.S)
POLISH (.B)

complements

NEW



09071.S	09071.B
33,10 €	33,10 €

Toilet brush holder with wall supportt

Material
AISI 304 stainless steel

Dimensions
385 mm x Ø 90 mm

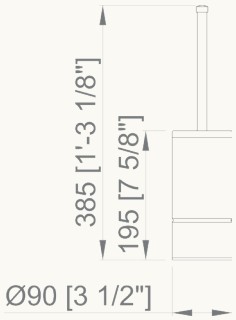



09073.S	09073.B
39,40 €	37,10 €

Toilet brush holder with wall support

Material
Stainless steel

Dimensions
375 mm x Ø 75 mm

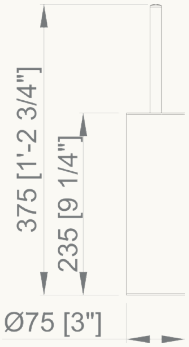



09074.S	09074.B
46,40 €	46,40 €

Toilet brush holder with wall support

Material
AISI 304 stainless steel

Dimensions
368 mm x 80 x 80 mm

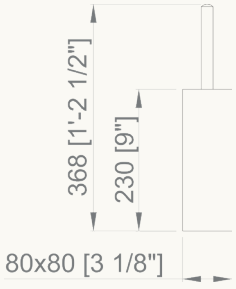

Toilet brush holder black colour

Finish
SATIN (.S)
POLISH (.B)

complements

NEW



09075.S	09075.B
41,80 €	41,80 €

Toilet brush holder with wall support

Material
AISI 304 stainless steel

Dimensions
389 mm x 80 x 80 mm





09076.S
41,80 €

Toilet brush holder with wall support

Material
Stainless steel

Dimensions
420 mm x Ø 95 mm



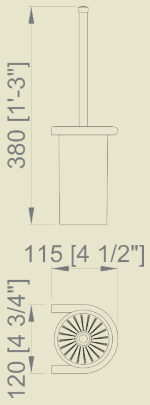

09077.S	09077.B
37,10 €	37,10 €

Toilet brush holder with wall support

Material
AISI 304 stainless steel

Dimensions
380 x 120 x 115 mm



SPARE PARTS

90425.K
3,15 €

Toilet Brush replacement black colour for models 09073 and 09074, 09075 09077

90426.K
3,15 €

Toilet brush replacement black colour for models 09071 and 09076

Finish
POLISH (.B)

complements

NEW

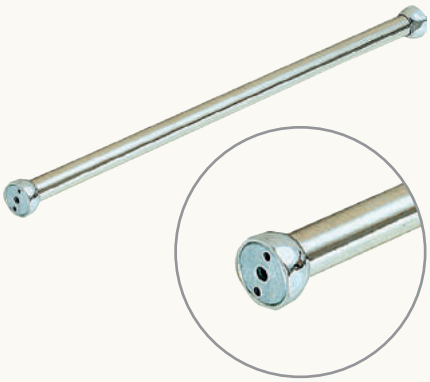

09039.230.A

74,20 €

Curtain rod with hidden screws

Material
Stainless steel tube
Zinc alloy brackets

Dimensions
2300 mm, Ø 25,5 mm

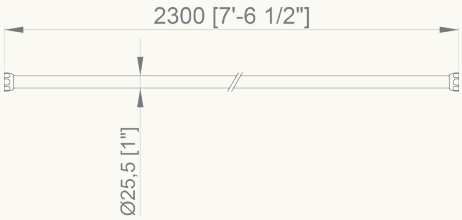



09039.183.B

55,70 €

Curtain rod with exposed screws

Material
Stainless steel

Dimensions
1830 mm, Ø 25,5 mm

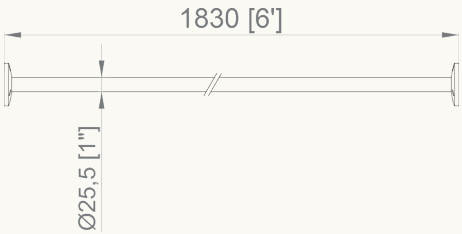

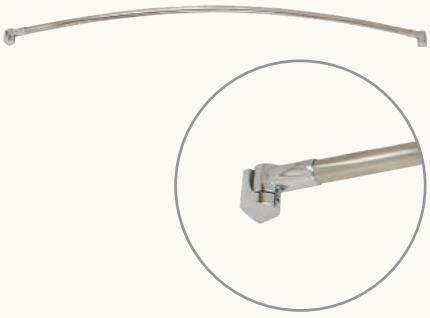

09040.152.B

74,20 €

Curced curtain rod with hidden screws

Material
Stainless steel tube
Chrome-plated zinc alloy brackets

Dimensions
1440 mm, Ø 25,5 mm

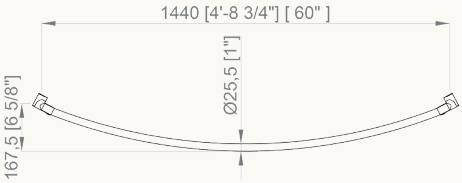



09042.B

88,90 €

Angular curtain rod with hidden srews

Material
Stainless steel

Dimensions
800 x 800 mm, Ø 25,5 mm

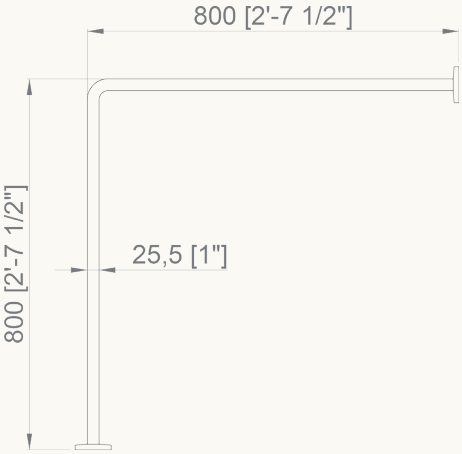

Finish
SATIN (.S)
POLISH (.B)
WHITE (.W)

complements

NEW

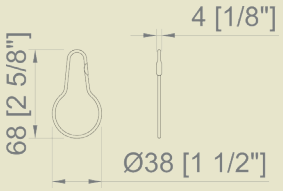

09043.B

12,80 €

Ring for shower curtain.
Pack 12 units

Material
Stainless steel





09051.106.V

18,60 €

Opaque shower curtain.
Anti-bacterial and anti-mold

Material
Vinyl

Dimensions
1830 x 1065 mm



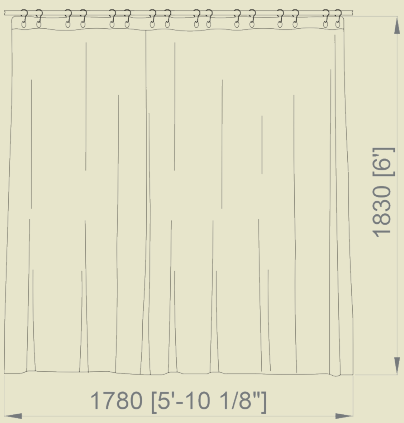

09051.178.V

22,00 €

Opaque shower curtain.
Anti-bacterial and anti-mold

Material
Vinyl

Dimensions
1830 x 1780 mm



Finish
POLISH (.B)

vanity



08012.B
53,90 €

Adjustable mirror height.
Vision without magnification

Material
Chrome-plated ABS

Dimensions
460 x 205 x 132 mm
Ø mirror 190 mm

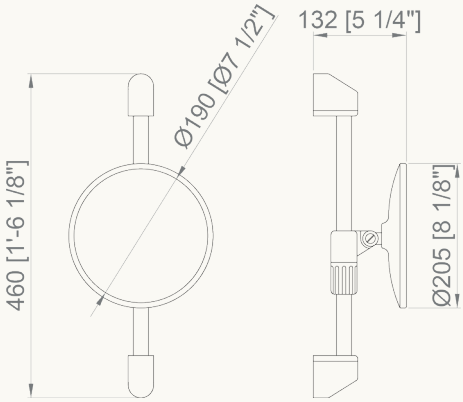



08007.B
31,70 €

Extendable mirror with two sides. Vision without magnification and x 2

Material
Chrome-plated ABS

Dimensions
300 x 175 x 20 mm
Ø mirror 140 mm

Dimensions extended
417 x 450 mm

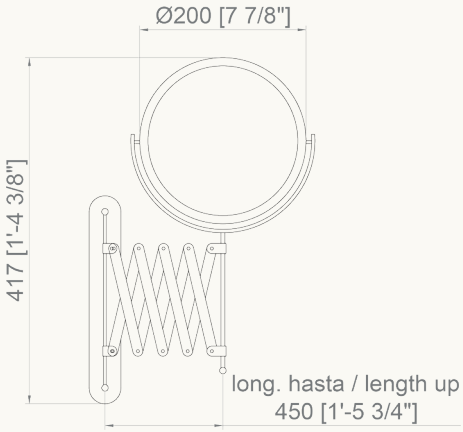

NEW



08003.B
153,00 €

Extendable mirror with x 3 magnification with led

Material
Brass and stainless steel

Mirror dimensions
202 x 202 mm

Dimensions extended
410 x 205 mm

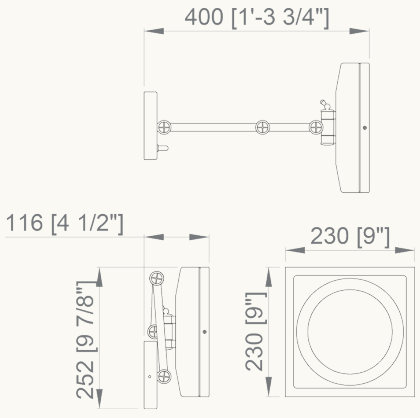

NEW



08006.B
133,00 €

Extendable mirror with x 3 magnification. With LED lighting

Material
Chrome-plated brass and stainless steel

Mirror dimensions
Ø 160 mm

Dimensions extended
215 x 450 mm

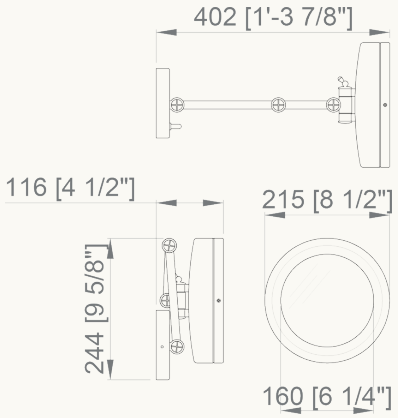

Additional technical information on www.nofer.com

Finish
SATIN (.S)
POLISH (.B)
WHITE (.W)

vanity

NEW

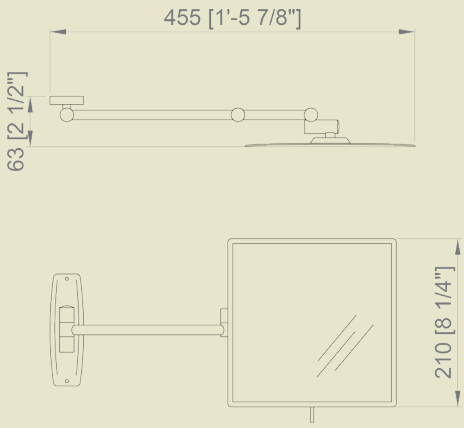

08015.B

125,00 €

Square extensible mirror.
Vision x3

Material
Chrome-plated brass

Mirror dimensions
210 x 210 mm

Dimensions extended
210 x 455 x 63 mm

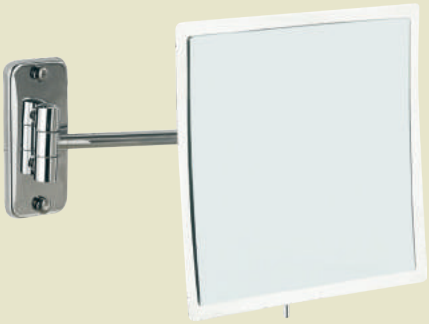

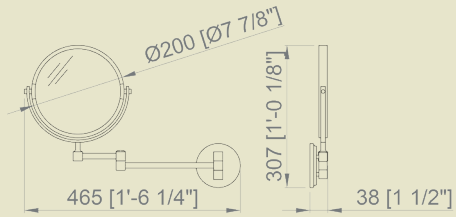

08009.2.B

67,60 €

Extendable mirror with two sides. Normal vision and x 5

Material
Chrome-plated brass

Mirror dimensions
Ø 200 mm

Dimensions extended
300 x 450 x 40 mm

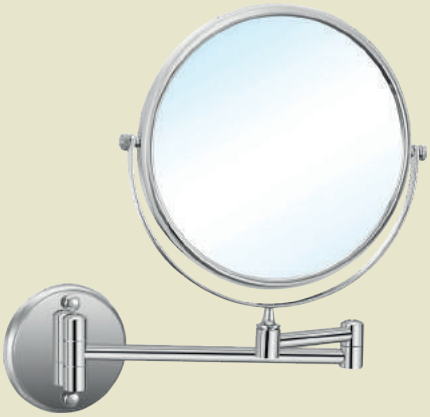



08005.B

81,80 €

Extensible magnifiyng mirror.
Normal vision and x3

Material
Chrome-plated brass

Dimensions
420 x 250 x 130 mm



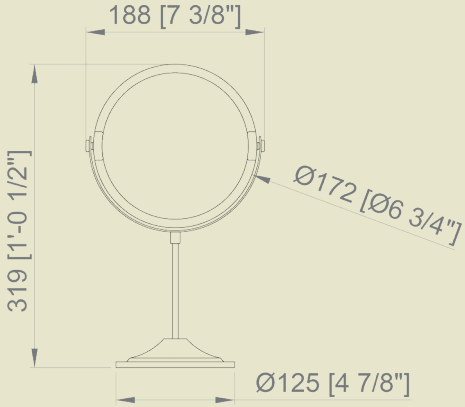

08004.B

54,40 €

Extensible magnifiyng mirror.
Normal vision and x3

Material
Chrome-plated brass

Dimensions
319 x 188 x 125 mm
Ø mirror 172 mm



reflex



Mirror with frame

Material
Stainless steel AISI 304 Frame

Finishes
SATIN (.S)
POLISH (.B)
WHITE (.W)

Other sizes available on request

SATIN (.S)



POLISH (.B)



WHITE (.W)



08050.S	08050.B
155,00 €	155,00 €

08050.W
155,00 €

Folded frame
Dimensions
600 x 450 x 20 mm

Thickness
3 mm

08050.6.S	08050.6.B
308,00 €	308,00 €

08050.6.W
308,00 €

Welded frame
With HPL board
Dimensions
600 x 450 x 20 mm

Thickness
6 mm

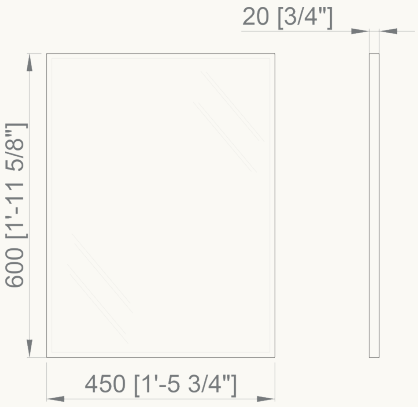

08051.S	08051.B
156,00 €	156,00 €

08051.W
156,00 €

Folded frame
Dimensions
700 x 500 x 20 mm

Thickness
3 mm

08051.6.S	08051.6.B
330,00 €	330,00 €

08051.6.W
330,00 €

Welded frame
With HPL board
Dimensions
700 x 500 x 20 mm

Thickness
6 mm

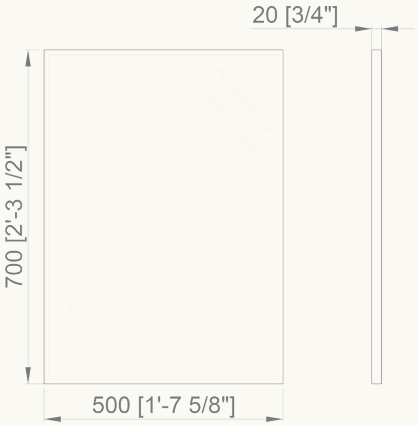

08052.S	08052.B
156,00 €	156,00 €

08052.W
156,00 €

Folded frame
Dimensions
800 x 600 x 20 mm

Thickness
3 mm

08052.6.S	08052.6.B
392,00 €	392,00 €

08052.6.W
392,00 €

Welded frame
With HPL board
Dimensions
800 x 600 x 20 mm

Thickness
6 mm

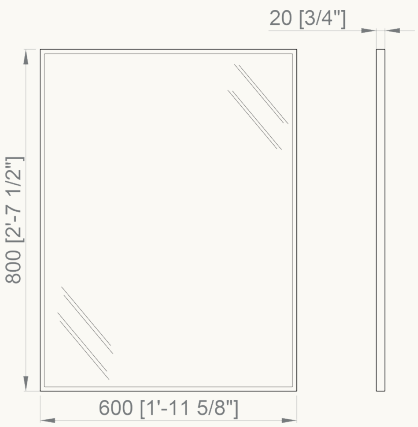

Additional technical information on www.nofer.com



WARE - SANITAIRES DE BAIN ACIER INOX - SANITARI DI BAGNO IN ACCIAIO INOX - SANITÁRIOS PARA BANHO AÇO INOX - SANITARIOS INOX - STAINLESS STEEL SANITARY WARE - **SANITAIRES DE BAIN ACIER INOX** - SANITARI DI BAGNO IN ACCIAIO INOX - SANITÁRIOS PARA BANHO AÇO INOX - SANITARIOS INOX - STAINLESS STEEL SANITARY WARE - SANITAIRES DE BAIN ACIER INOX - **SANITARI DI BAGNO IN ACCIAIO INOX** - SANITÁRIOS PARA BANHO AÇO INOX - SANITARIOS INOX - STAINLESS STEEL SANITARY WARE - SANITAIRES DE BAIN ACIER INOX - SANITARI DI BAGNO IN ACCIAIO INOX - **SANITÁRIOS PARA BANHO AÇO INOX** - SANITARIOS INOX - STAINLESS STEEL SANITARY WARE - SANITAIRES DE BAIN ACIER INOX - SANITARI DI BAGNO IN ACCIAIO INOX - SANITÁRIOS PARA BANHO AÇO INOX - **SANITARIOS INOX** - STAINLESS STEEL SANITARY WARE - SANITAIRES DE BAIN ACIER INOX - SANITARI DI BAGNO IN ACCIAIO INOX - SANITÁRIOS PARA BANHO AÇO INOX - SANITARIOS INOX - **STAINLESS STEEL SANITARY WARE** - SANITAIRES DE BAIN ACIER INOX - SANITARI DI BAGNO IN ACCIAIO INOX - SANITÁRIOS PARA BANHO AÇO INOX - SANITARIOS INOX -



“All men are born equal,
but it is the last time that they do.”
Anonymous

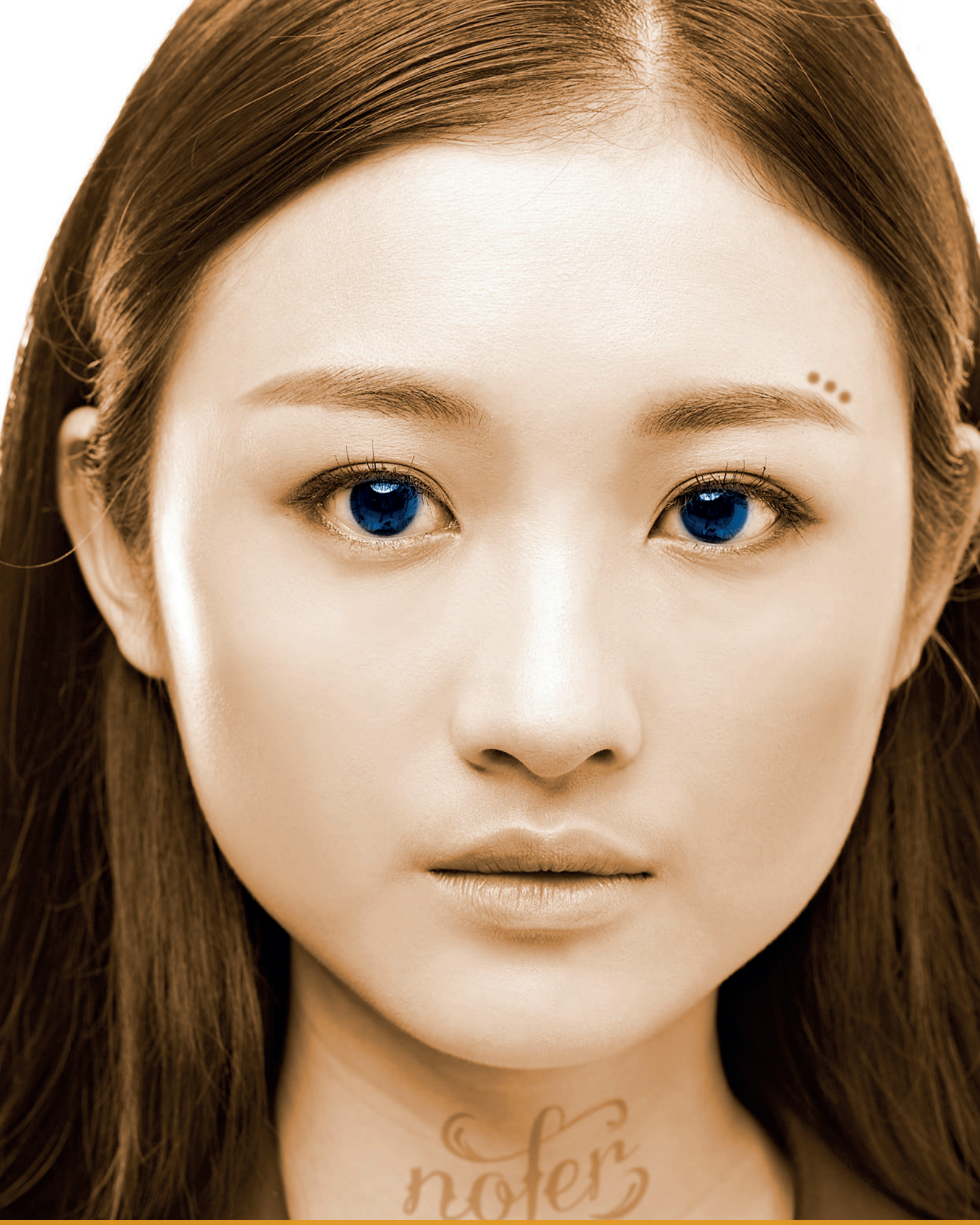

...regardless of their origin, race,
their customs, their limitations...

NOFER®

STAINLESS STEEL SANITARY

wc toilets

Inside filled with polyurethane foam and anti-sound protection

Material
AISI 304 stainless steel

Finish
SATIN (.S)
POLISH (.B)



13012.S	13012.B
831,00 €	830,00 €

Toilet on ground, horizontal outlet

Dimensions
390 x 355 x 540 mm

Covers (not included):
5000AR, 15029.S, 15031.NG
(see page 198, 199)

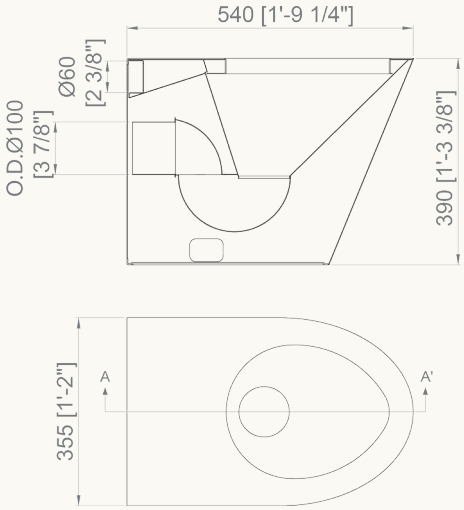



13013.S	13013.B
995,00 €	995,00 €

Floor based toilet, horizontal outlet. Optional vertical outlet by adding technical curve 13111 (Price: 0,00 €)

Dimensions
390 x 355 x 640 mm

Covers (not included):
5000AR, 15029.S, 15031.NG
(see page 198, 199)

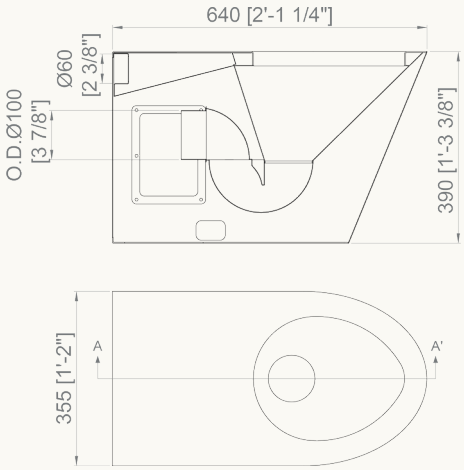

wc toilets

Material
AISI 304 stainless steel

Finish
SATIN (.S)
POLISH (.B)

Inside filled with polyurethane foam and anti-sound protection

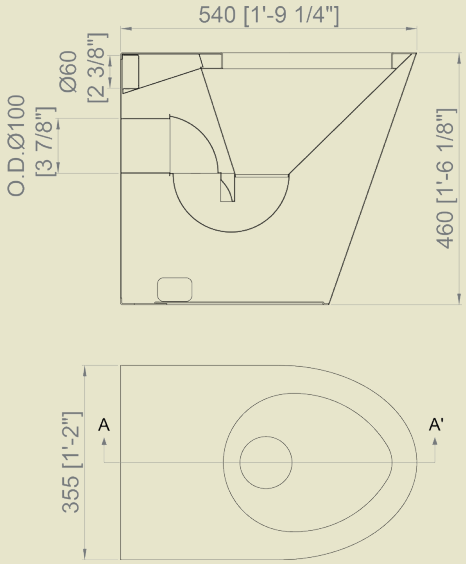

13012.M.S	13012.M.B
1230,00 €	**1230,00 €**

Floor based toilet, adapted

Dimensions
460 x 335 x 540 mm

Covers (not included):
5000AR, 15029.S, 15031.NG
(see page 198, 199)



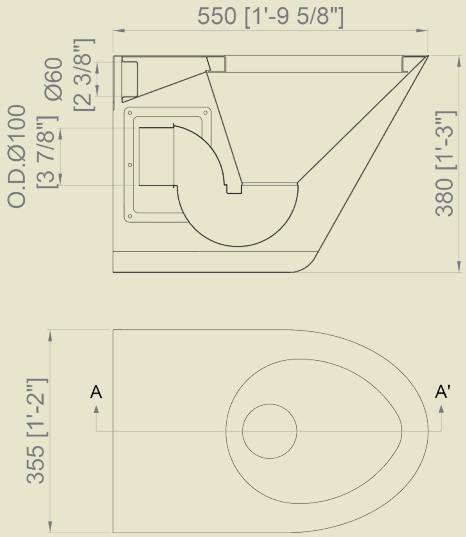

13018.S	13018.B
869,00 €	**899,00 €**

Floor based toilet, horizontal outlet

Dimensions
380 x 355 x 550 mm

Covers (not included):
5000AR, 15029.S
(see page 198, 199)



wc toilets

TOILET SEATS WITH COVER



15029.S

216,50 €

Material
AISI 304 stainless steel

Finish
Satin

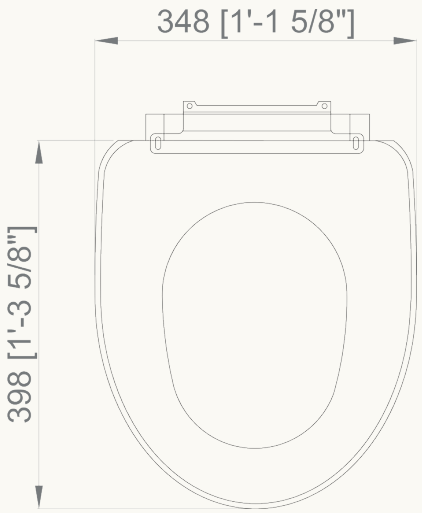



5000AR

36,10 €

Color
White

Toilet seat with cover
Universal adaptation

Material
Moulded wood



5000AR492

42,90 €

Color
Grey Manhattan

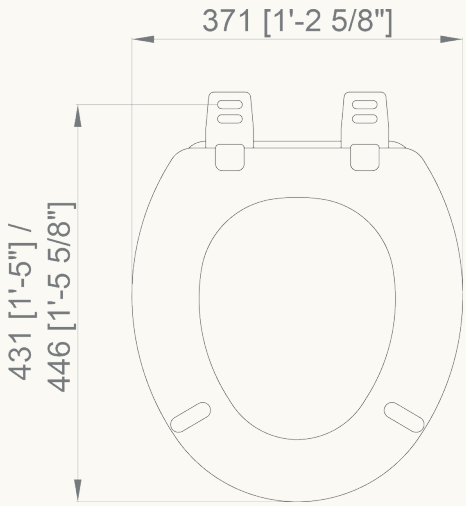



5000AR047

42,90 €

Color
Black

wc toilets

TOILET SEATS WITH LID

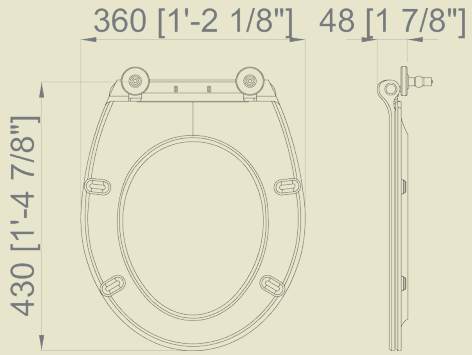

13147.W

38,30 €

Toilet seat. Slow lid fall

Material
Urea

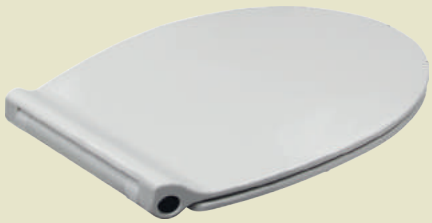

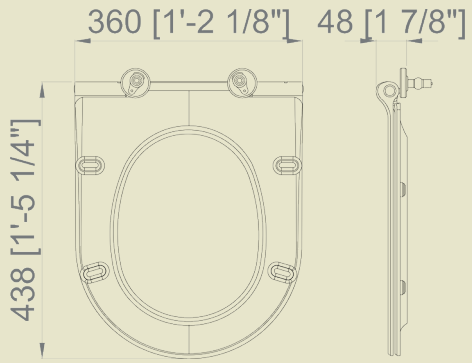

13148.W

39,40 €

Toilet seat. Slow lid fall

Material
Urea



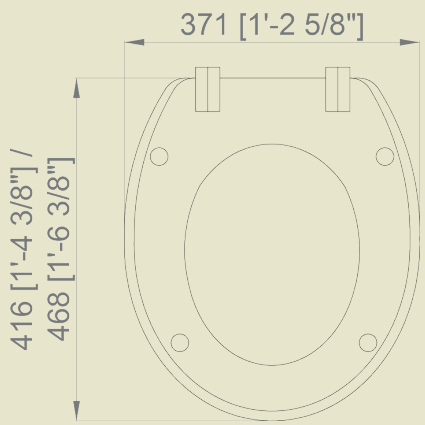

15031.NG

263,00 €

Toilet seat with cover

Material
Wood

Color
Clear walnut



Material
AISI 304 stainless steel

Finish
SATIN (.S)
POLISH (.B)

STAINLESS STEEL SANITARY

wc toilets

CHILD TOILET



13014.S	13014.B
1471,00 €	1635,00 €

Horizontal outlet. Toilet cover not included

Dimensions
300 x 280 x 435 mm

15030.BK
213,00 €

Children toilet cover

Material
Wood

Finish
Painted black

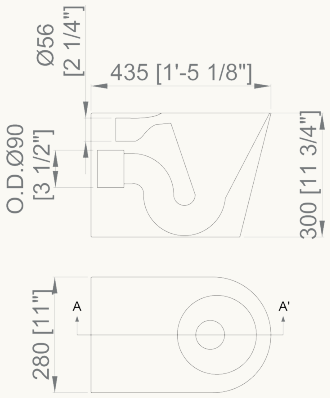

TOILET WITH CISTERNA



13016.S	13016.B
1767,00 €	1767,00 €

Toilet with dual flush cistern.

Horizontal water outlet. Horizontal connection optional 13112.K.

Vertical water outlet. Connection with 90° bent optionl 13111.K.

Lateral water inlet (left or right side). White PVC toilet cover included.

Dimensions
680 x 370 x 620 mm

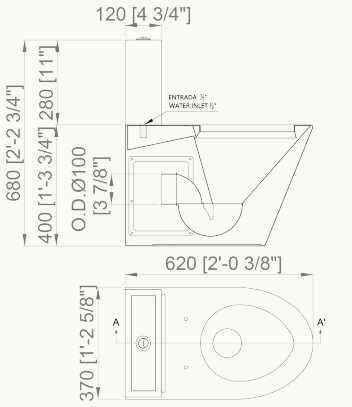





13111.K	13112.K
10,60 €	10,60 €

BIDET

NEW



13009.S
1159,00 €

Wall-hung bidet

Material
Stainless steel

Dimensions
380 x 355 x 540 mm

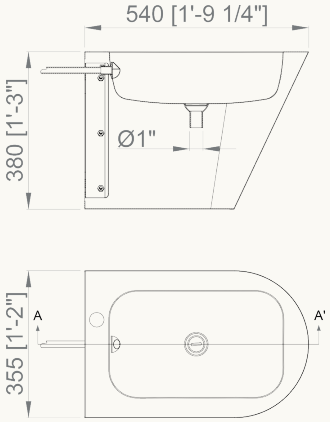

Additional technical information on www.nofer.com

WC

TURKISH SQUADS

Material
AISI 304 stainless steel

Finish
SATIN (.S)
POLISH (.B)

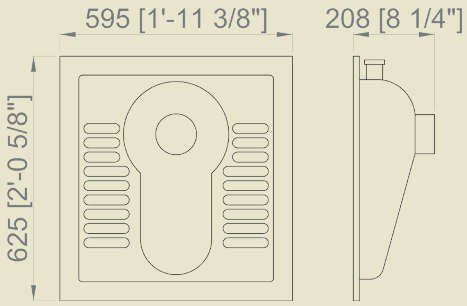

13023.B

352,00 €

NEW

Installed in floor. Spray nozzle with three water outlets

Dimensions
595 x 625 x 208 mm

Outlet
Ø 100 mm

Thickness
1,2 mm



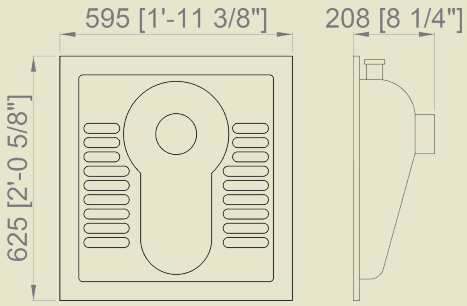

13021.B

324,80 €

Installed in floor. Spray nozzle with three water outlets

Dimensions
595 x 625 x 208 mm

Outlet
Ø 100 mm

Thickness
1 mm



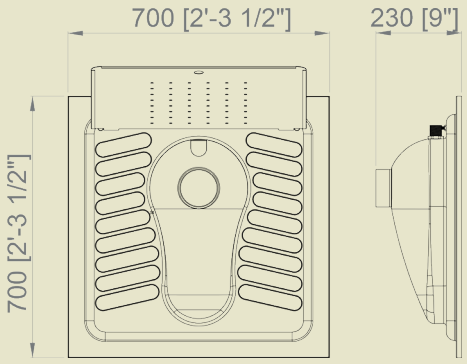

13022.SH

405,00 €

NEW

Installed in floor. Spray nozzle

Dimensions
700 x 700 x 230 mm

Outlet
Ø 100 mm

Thickness
1,2 mm



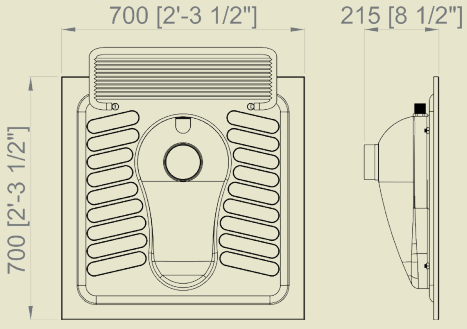

13022.GR

553,00 €

NEW

Installed in floor. Spray nozzle

Dimensions
700 x 700 x 215 mm

Outlet
Ø 100 mm

Thickness
1,2 mm



urinals

Material
AISI 304 stainless steel

Finish
SATIN (.S)
POLISH (.B)



13004.S	13004.B
605,00 €	**605,00 €**

Urinal for flush mounted flushing systems

Dimensions
600 x 360 x 395 mm

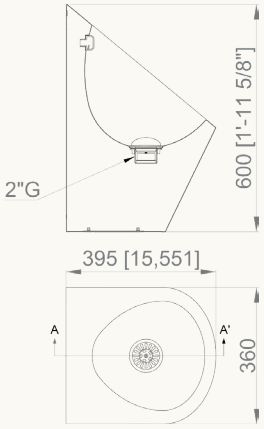



13004.70.S	13004.70.B
797,00 €	**774,00 €**

Waterless urinal

Dimensions
600 x 360 x 395 mm

06028.B
102,50 €



Waterless valve included

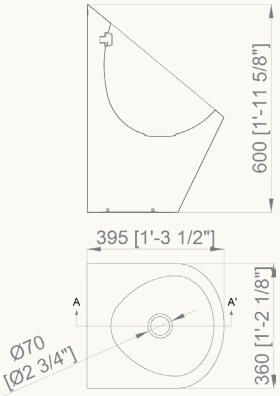



13001.S	13001.B
653,00 €	**653,00 €**

Urinal for surface mounted flushing systems

Dimensions
762 x 366 x 383 mm

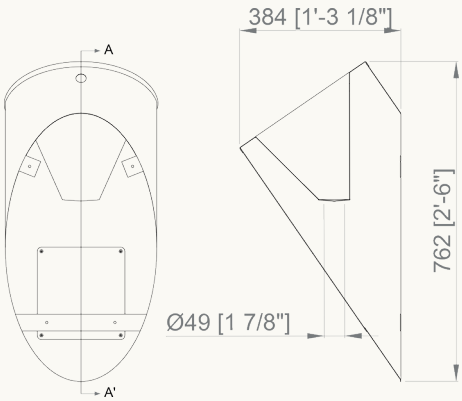

13002.S	13002.B
628,00 €	**653,00 €**

Urinal for flush mounted flushing systems

Dimensions
696 x 366 x 336 mm

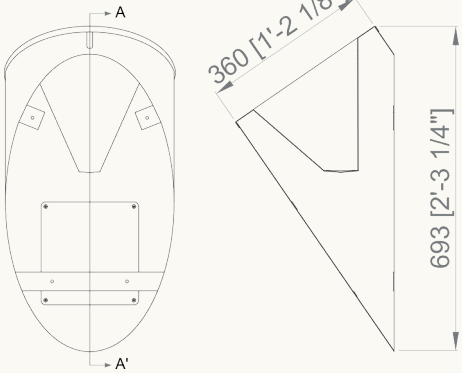

Additional technical information on www.nofer.com

urinals

Material
AISI 304 stainless steel

Finish
SATIN (.S)
POLISH (.B)

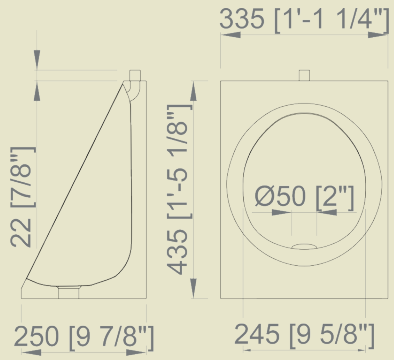

13006.S
353,00 €

Urinal for surface mounted flushing systems

Dimensions
435 x 335 x 250 mm



COLLECTIVE URINALS

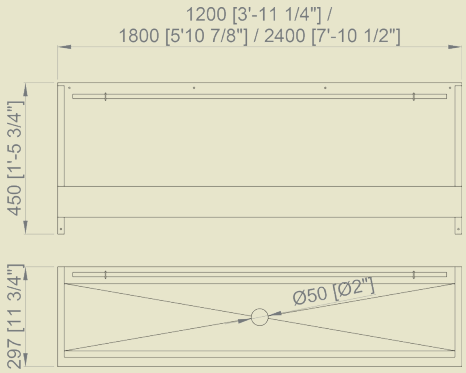

13003.12.S **1353,00 €**
Urinal for two users
Dimensions
450 x 1200 x 297 mm

13003.18.S **1490,00 €**
Urinal for three users
Dimensions
450 x 1800 x 297 mm

13003.24.S **1534,00 €**
Urinal for four users
Dimensions
450 x 2400 x 297 mm



URINALS SEPARATORS

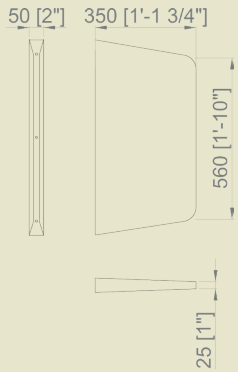

13007.S
638,00 €
Smooth plate urinal divider

Dimensions
560 x 50 x 350 mm



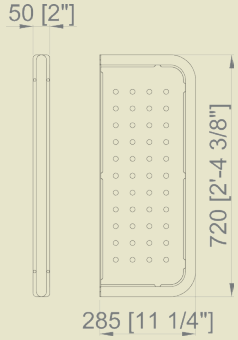

13008.S
474,00 €
Perforated plate urinal divider

Dimensions
720 x 50 x 285 mm







shower trays

Material
AISI 304 stainless steel

Finish
SATIN (.S)



13054.2.S
284,00 €

Dimensions
700 x 700 mm

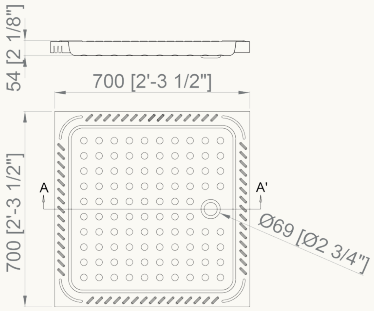

NEW



13055.2.S
544,00 €

Dimensions
800 x 800 mm

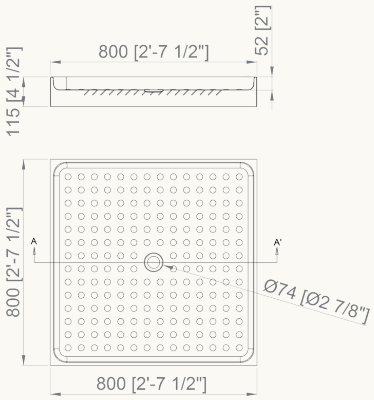

NEW



13056.2.S
684,00 €

Dimensions
900 x 900 mm

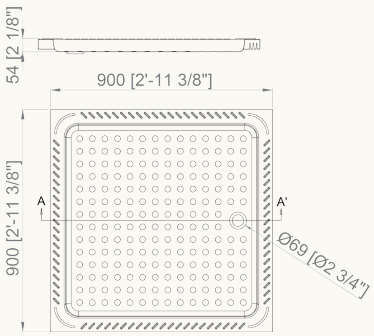

CHILD BATHTUBE



13058.2.S
992,00 €

Dimensions
250 x 700 x 400 mm

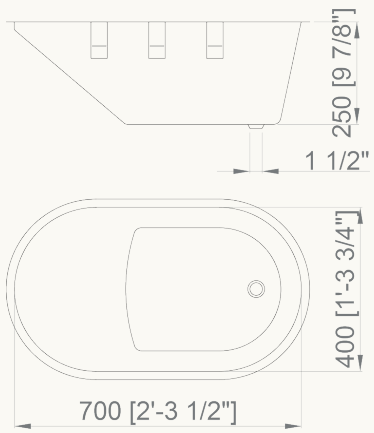

Additional technical information on www.nofer.com

Material
AISI 304 stainless steel

Finish
SATIN (.S)

wash sinks

PEDESTAL WASHBASINS WITH FAUCET

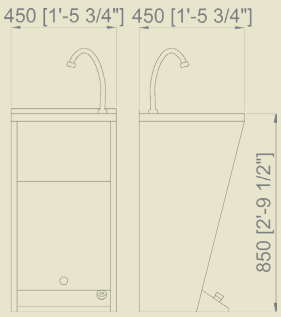

13044.S

629,00 €

Wash basin with frontal inspection lid. One water self closing faucet. Non-return valve included

Dimensions
850 x 450 x 450 mm



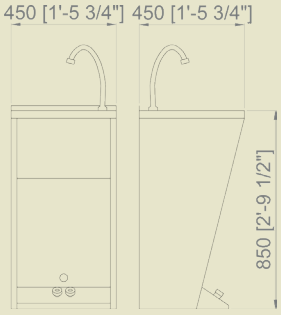

13045.S

653,00 €

Wash basin with frontal inspection lid. Self closing mixer with double push button: cold / hot

Dimensions
850 x 450 x 450 mm



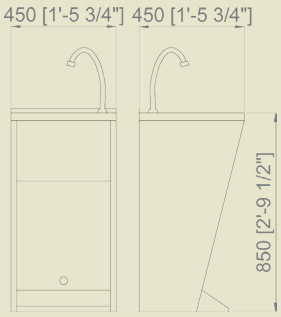

13044.BAT

1233,00 €

Wash basin with frontal inspection lid. Self closing faucet operated by electronic sensor (battery powered). Non-return valve included

Dimensions
850 x 450 x 450 mm



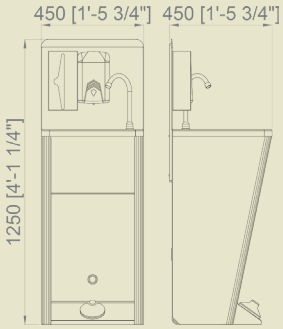

13044.MOV

1744,00 €

Mobile and autonomous hand wash basin with frontal inspection lid. With hydraulic push button. Water inlet, drain pipe or electrics not needed. Soap dispenser, tissue dispenser, waste bin and faucet included

Dimensions
1250 x 450 x 450 mm



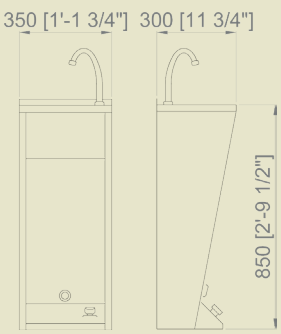

13044.MINI

720,00 €

Extra-small wash basin with frontal inspection lid. Self closing one water faucet with push button. Equipped with no-return mixing valve and bin

Dimensions
850 x 350 x 300 mm



Material
AISI 304 stainless steel

Finish
SATIN (.S)
POLISH (.B)

wash built-in sinks

WASH BASIN WITHOUT OVERFLOW HOLE



13028.S	13028.B
64,50 €	56,70 €

Dimensions
Ø int. 260 mm, Ø ext. 305 mm
Height 110 mm

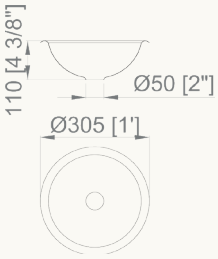

13029.S	13029.B
71,50 €	58,00 €

Dimensions
Ø int. 310 mm, Ø ext. 355 mm
Height 133 mm

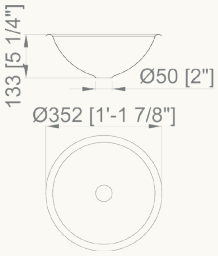



13030.S	13030.B
78,00 €	60,90 €

Dimensions
Ø int. 355 mm, Ø ext. 405 mm,
Height 152 mm

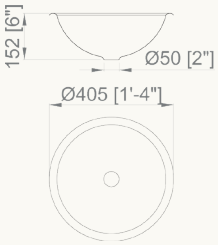

WASH BASIN WITH OVERFLOW

13028.RS	13028.RB
67,10 €	59,30 €

Dimensions
Ø int. 260 mm, Ø ext. 305 mm
Height 110 mm



13029.RS	13029.RB
73,90 €	60,40 €

Dimensions
Ø int. 310 mm, Ø ext. 355 mm
Height 133 mm

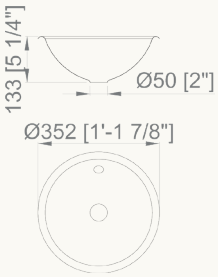

13030.RS	13030.RB
80,40 €	63,50 €

Dimensions
Ø int. 355 mm, Ø ext. 405 mm,
Height 152 mm

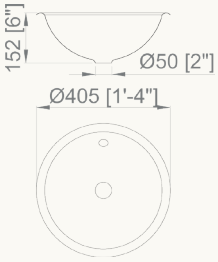

Material
AISI 304 stainless steel

Finish
SATIN (.S)
POLISH (.B)

wash built-in sinks

WASH BASIN WITHOUT OVERFLOW HOLE

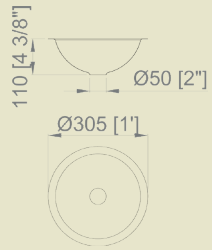

13028.S.PLANA	13028.B.PLANA
64,50 €	**56,70 €**

Dimensions
Ø int. 260 mm, Ø ext. 305 mm
Height 110 mm





13029.S.PLANA	13029.B.PLANA
71,50 €	**58,00 €**

Dimensions
Ø int. 310 mm, Ø ext. 355 mm
Height 133 mm

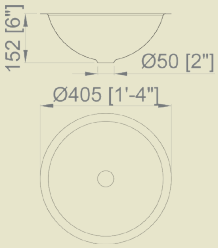

13030.S.PLANA	13030.B.PLANA
78,00 €	**60,90 €**

Dimensions
Ø int. 355 mm, Ø ext. 405 mm,
Height 152 mm



WASH BASIN WITH OVERFLOW HOLE

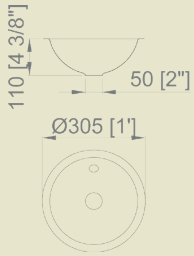

13028.RS.PLANA	13028.RB.PLANA
67,10 €	**59,30 €**

Dimensions
Ø int. 260 mm, Ø ext. 305 mm
Height 110 mm

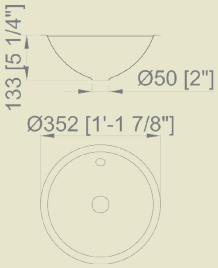

13029.RS.PLANA	13029.RB.PLANA
73,90 €	**60,40 €**

Dimensions
Ø int. 310 mm, Ø ext. 355 mm
Height 133 mm

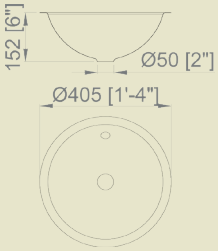

13030.RS.PLANA	13030.RB.PLANA
80,40 €	**63,50 €**

Dimensions
Ø int. 355 mm, Ø ext. 405 mm,
Height 152 mm

Material
AISI 304 stainless steel

Finish
SATIN (.S)
POLISH (.B)

wash open sinks

NEW



13024.2.S
418,00 €

Ergonomic wall mounted wash basin

Dimensions
165 x 600 x 460 mm

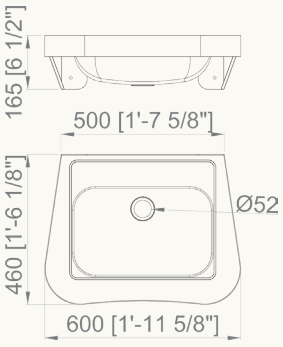



13037.B
246,50 €

Wall mounted corner wash basin with rounded front and Ø20 mm hole for faucet

Dimensions
150 x 305 x 305 mm

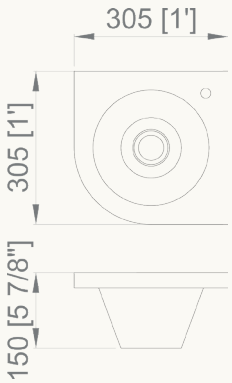



13036.ALR.S
192,50 €

Wall mounted corner wash basin with rounded front

Dimensions
125 x 360 x 360 mm





13036.A.S
203,00 €

Wall mounted corner wash basin with rounded front

Dimensions
125 x 360 x 360 mm

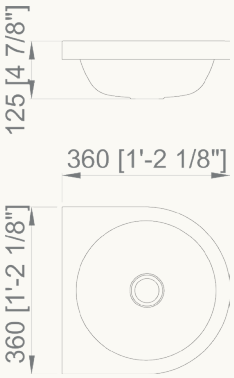

Material
AISI 304 stainless steel

Finish
SATIN (.S)
POLISH (.B)

wash open sinks



13039.A.S
258,00 €

Wall mounted wash basin

Dimensions
125 x 360 x 360 mm

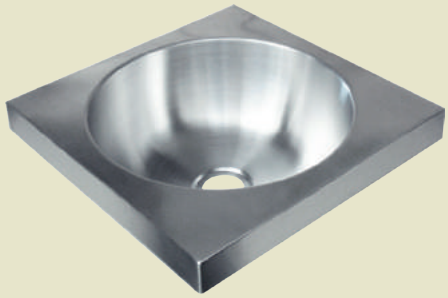

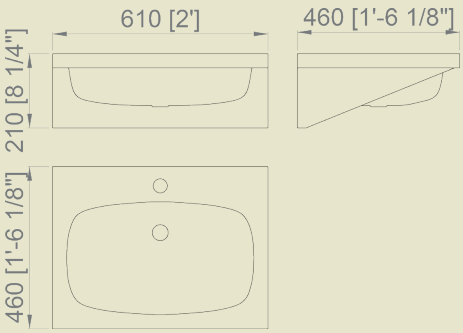

13033.S
546,00 €

Lavamanos with orificio para faucets and rebosadero

Dimensions
210 x 610 x 460 mm



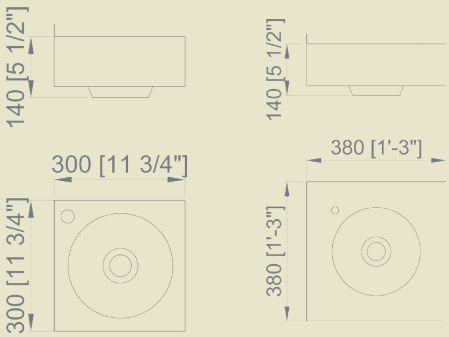

Lavamanos mural
with orificio para faucets
Ø 20 mm

13038.B
314,00 €

Dimensions
140 x 300 x 300 mm

13041.B
379,00 €

Dimensions
140 x 380 x 380 mm



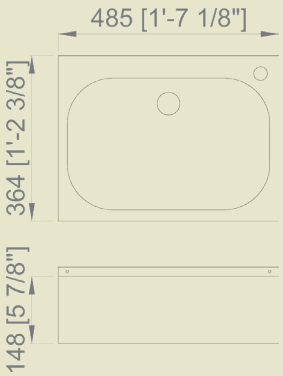

13042.B
578,00 €

Wall mounted wash basin with two faucet holes and overflow. Valve and overflow fittings included

Dimensions
148 x 485 x 364 mm



Material
AISI 304 stainless steel

Finish
SATIN (.S)
POLISH (.B)

wash sinks

OPEN SINKS WITH FAUCET



13040.S

787,00 €

Flush mounted hand rinse unit with one water self closing faucet

Dimensions
350 x 400 x 200 mm

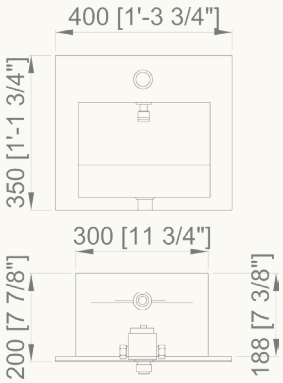



13046.S

508,00 €

Wall mounted wash basin with faucet. Knee operation. Equipped with no-return mixing valve

Dimensions
215 x 450 x 450 mm

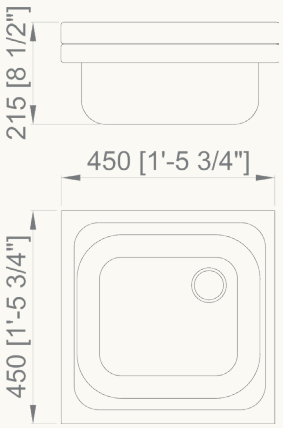



13046.BAT

996,00 €

Wall mounted wash basin with automatic faucet. Operated by sensor (battery powered). Equipped with no-return mixing valve

Dimensions
215 x 450 x 450 mm

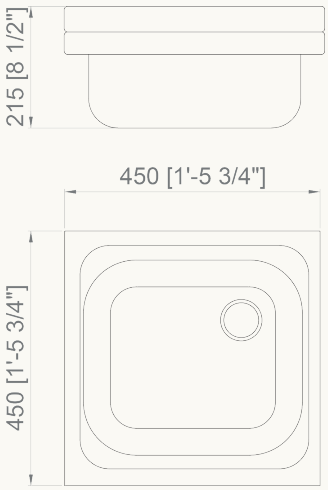

Material
AISI 304 stainless steel

Finish
SATIN (.S)
POLISH (.B)

wash closed sinks

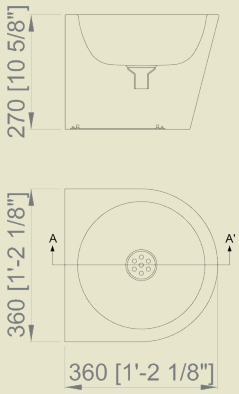

13036.CLR.S

311,00 €

Wall mounted corner wash basin with rounded front and lower inspection hatch

Dimensions
270 x 360 x 360 mm



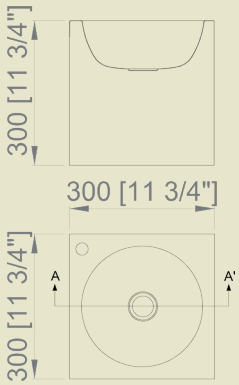

13097.B

537,00 €

Wall mounted wash basin with Ø20 mm faucet hole and lower inspection hatch

Dimensions
300 x 300 x 300 mm



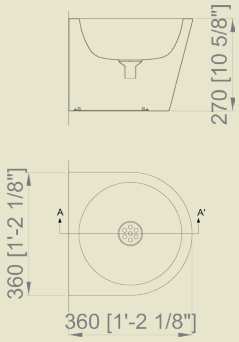

13036.C.S

311,00 €

Wall mounted wash basin with rounded front and lower inspection hatch

Dimensions
270 x 360 x 360 mm



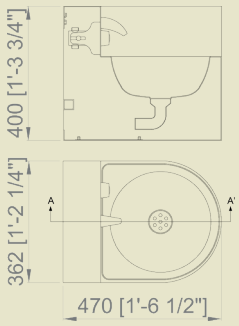

13036.W

992,00 €

Wall mounted wash basin with trim and lower inspection hatch. Vandal-proof faucet set included: faucet with push button and spout.

Dimensions
400 x 362 x 470 mm







Material
AISI 304 stainless steel

Finish
SATIN (.S)

wash sinks

COLLECTIVE SINK WITH TRIM

Collectice sink with wall fixation and trim.

It needs reinforcement with brackets and legs not included.

Includes holes for double faucet gable (Ø 35 mm) with adapter for fitting for single faucet gable (Ø 22 mm).

13106 optional drain valve.

Available tailor made dimensions on request.



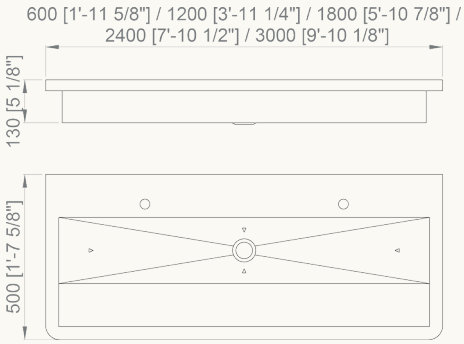

With faucet holes

13050.06.S	13050.12.S	13050.18.S	13050.24.S	13050.30.S
460,00 €	**621,00 €**	**753,00 €**	**958,00 €**	**1195,00 €**
Dimensions 428 x 600 x 500 mm	Dimensions 428 x 1200 x 500 mm	Dimensions 428 x 1800 x 500 mm	Dimensions 428 x 2400 x 500 mm	Dimensions 428 x 3000 x 500 mm

Without faucet holes

13050.06.SO.S	13050.12.SO.S	13050.18.SO.S	13050.24.SO.S	13050.30.SO.S
480,00 €	**653,00 €**	**785,00 €**	**1053,00 €**	**1337,00 €**
Dimensions 428 x 600 x 500 mm	Dimensions 428 x 1200 x 500 mm	Dimensions 428 x 1800 x 500 mm	Dimensions 428 x 2400 x 500 mm	Dimensions 428 x 3000 x 500 mm

Dimensional outline sample: 13050.12.S

Material
AISI 304 stainless steel

Finish
SATIN (.S)

wash sinks

COLLECTIVE SINK WITHOUT TRIM

Collectice sink with wall fixation without trim.

It needs reinforcement with 2 brackets and legs not included.

Includes holes for double faucet gable (Ø 35 mm) with adapter for fitting for single faucet gable (Ø 22 mm).

13106 optional drain valve.

Available tailor made dimensions on request.

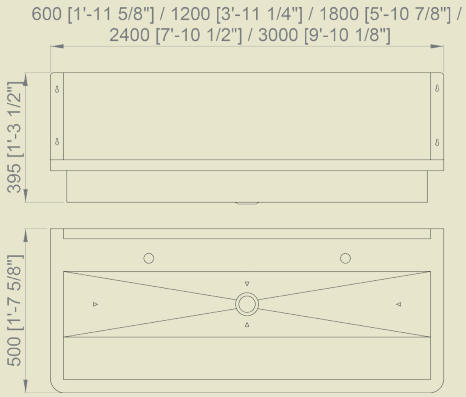



With faucet holes

13050.06.SP.S	13050.12.SP.S	13050.18.SP.S	13050.24.SP.S	13050.30.SP.S
460,00 €	**626,00 €**	**723,00 €**	**910,00 €**	**1143,00 €**
Dimensions 130 x 600 x 500 mm	Dimensions 130 x 1200 x 500 mm	Dimensions 130 x 1800 x 500 mm	Dimensions 130 x 2400 x 500 mm	Dimensions 130 x 3000 x 500 mm

Without faucet holes

13050.06.SPO.S	13050.12.SPO.S	13050.18.SPO.S	13050.24.SPO.S	13050.30.SPO.S
459,00 €	**640,00 €**	**774,00 €**	**1021,00 €**	**1326,00 €**
Dimensions 130 x 600 x 500 mm	Dimensions 130 x 1200 x 500 mm	Dimensions 130 x 1800 x 500 mm	Dimensions 130 x 2400 x 500 mm	Dimensions 130 x 3000 x 500 mm

Dimensional outline sample: 13050.12.SP.S

Material
AISI 304 stainless steel

Finish
SATIN (.S)

wash sinks



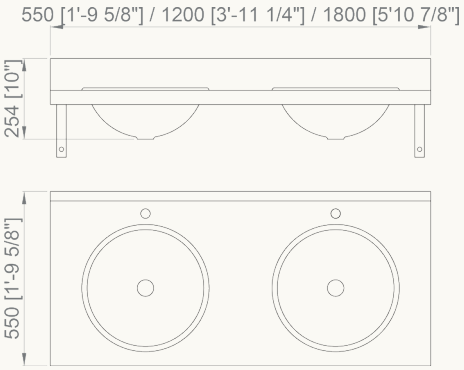

Integrated sine

13070.1.S	13070.2.S	13070.3.S
880,00 €	**1231,00 €**	**1657,00 €**
Dimensions 550 x 550 mm Trim 100 mm	Dimensions 1200 x 550 mm Trim 100 mm	Dimensions 1800 x 550 mm Trim 100 mm

Overlying sine

13071.1.S	13071.2.S	13071.3.S
718,00 €	**944,00 €**	**1172,00 €**
Dimensions 550 x 550 mm Trim 100 mm	Dimensions 1200 x 550 mm Trim 100 mm	Dimensions 1800 x 550 mm Trim 100 mm

Custom dimensions available on request



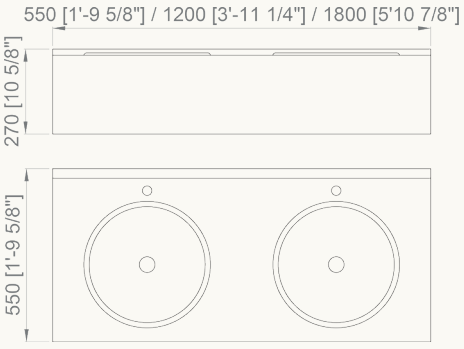

Integrated sine

13080.1.S	13080.2.S	13080.3.S
1066,00 €	**1519,00 €**	**1842,00 €**
Dimensions 550 x 550 mm Front 250 mm	Dimensions 1200 x 550 mm Front 250 mm	Dimensions 1800 x 550 mm Front 250 mm

Overlying sine

13081.1.S	13081.2.S	13081.3.S
914,00 €	**1186,00 €**	**1405,00 €**
Dimensions 550 x 550 mm Front 250 mm	Dimensions 1200 x 550 mm Front 250 mm	Dimensions 1800 x 550 mm Front 250 mm

Custom dimensions available on request

wash sinks

ACCESSORIES FOR 13050 SERIES



13050.P

41,50 €

Stainless steel standard for reinforcement of collective sink. Fixing threaded to sink and soil.



13050.C

41,50 €

Square of galvanized steel for reinforcement of collective sinks. Price per unit. Installation: one bracket at each end of the sink. A square can be replaced with two additional legs to the front reinforcement

ACCESSORIES FOR 13070/13071 AND 13080/13081



13105.B

42,40 €

Valve with siphon

Material
Chrome-plated brass



13106.N

6,25 €

Valve with stopper

Material
ABS



13107.B

79,10 €

Valve with siphon, over-flow tube and stopper

Material
ABS



13108.N

40,60 €

Valve with siphon, over-flow tube and stopper

Material
ABS

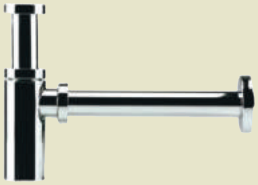

13110.B

105,00 €

Valve with siphon, over-flow tube and stopper

Material
Chrome-plated brass



13113.B

11,35 €

Drill cover
Ø 40 mm

Material
Stainless steel and ABS



13114.W

8,05 €

Valve with siphon and cap

Material
ABS



NEW

90775.B

34,10 €

Valve with cap

Material
Chrome-plated brass

Material
AISI 304 stainless steel

Finish
SATIN (.S)

wash sinks

DESIGN SINKS



13060.S

321,00 €

Countertop sink with overflow

Includes drain valve

Dimensions
180 mm; Ø 420 mm





13061.S

260,00 €

Sink. Includes drain valve

Faucets not included

Dimensions
210 x 362 x 360 mm

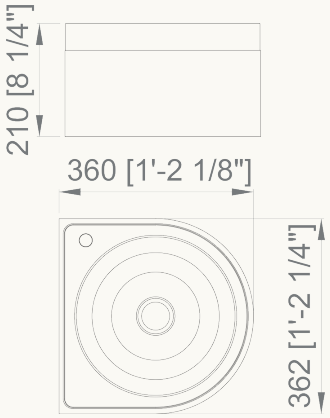

Additional technical information on www.nofer.com

Material
AISI 304 stainless steel

Finish
SATIN (.S)

wash sinks

DESIGN SINKS

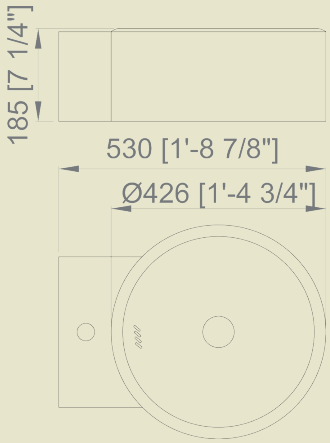

13062.S

453,65 €

Wall sink with overflow

Includes drain valve

Faucets not included

Dimensions
185 x 426 x 530 mm



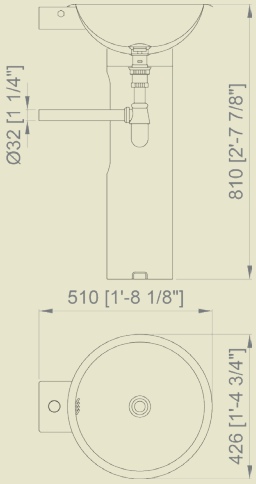

13063.S

501,50 €

Sink with pedestal

Includes drain valve

Faucets not included

Dimensions
810 x 426 x 510 mm



Material
AISI 304 stainless steel

Finish
POLISH (.B)

wash sinks

DESIGN SINKS



13025.B

444,00 €

Wall sink with ground support

Dimensions
915 x 400 x 505 mm

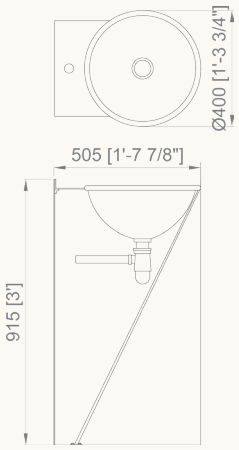



13026.B

590,00 €

Sink with pedestal

Dimensions
820 x 396 x 490 mm

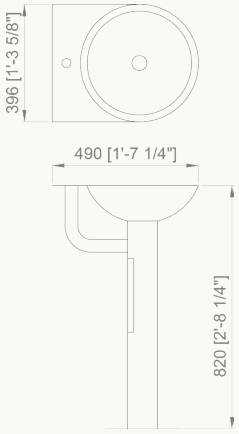



13027.B

438,00 €

Wall mounted sink

Dimensions
310 x 560 x 450mm

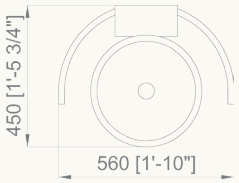

Material
AISI 304 stainless steel

Finish
SATIN (.S)

wash sinks

SURGICAL SINKS

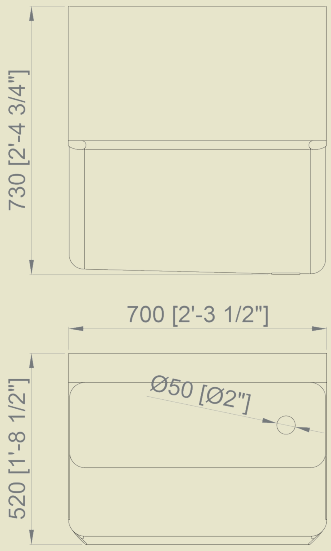

Mural surgical sink with drain on right side. It includes fixing material

15001.1.S.2
2431,40 €
One user
Dimensions
730 x 700 x 520 mm
Trim 365 mm



15001.2.S.2
3160,00 €
Two users
Dimensions
730 x 1400 x 520 mm
Trim 365 mm

15001.3.S.2
3902,25 €
Three users
Dimensions
730 x 2100 x 520 mm
Trim 365 mm

BED-PAN WASHERS

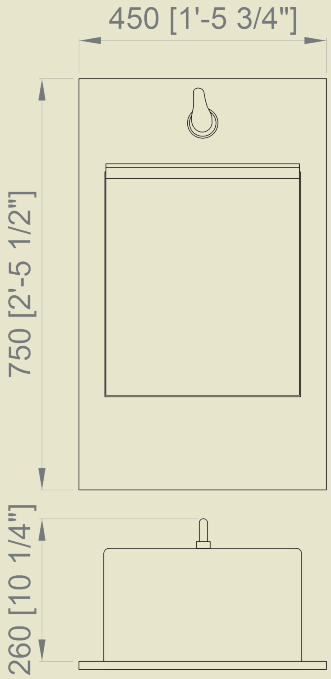





Embedded bed-pan washer

Dimensions
750 x 450 x 275 mm

Custom made dimensions on request

15010.SG
1080,00 €
With one faucet

15010.ST
1086,00 €
With one self-closing faucet

15010.SM
1140,00 €
With one mixer

15010.STM
1380,00 €
With one self-closing mixer

15011.S
49,90 €
Holder for one bed-pan

15012.S
67,50 €
Holder for two bed-pans

15013.S
89,00 €
Holder for one hygienic bottle

15014.S
97,70 €
Holder for two hygienic bottles





vandal-proof

NEW



09013.R.S **34,80 €**

Security vandal resistant front-mounted hanger

Material
Stainless steel

Dimensions
108 x 108 x 54 mm

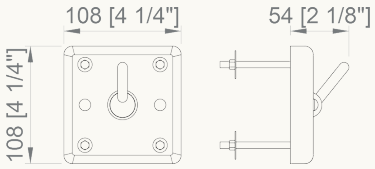

NEW



09013.P.S **58,60 €**

Security vandal resistant front-mounted hanger

Material
Stainless steel

Dimensions
108 x 108 x 54 mm

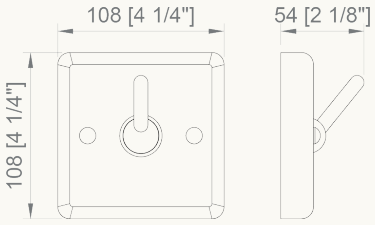



08071.B **124,00 €**

Vandal-proof mirror

Material
Polished mirror

Dimensions
700 x 500 mm

Thickness
1,2 mm

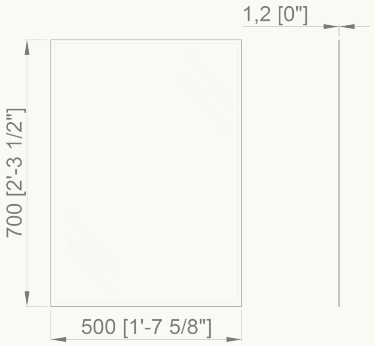



13054.P **371,00 €**

With vandal-proof valve

Dimensions
700 x 700 mm

Recommended faucet, not included: 07017.2.10.B (see page 228)

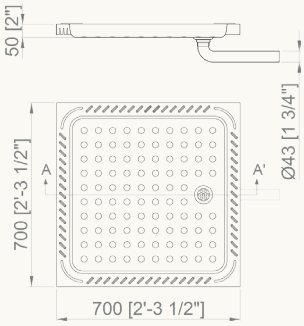



13004.P.S **826,00 €**

Urinal for embedded flush systems. Wall xixing by bolts included. Inside filled with polyurethane foam and anti-sound protection

Dimensions
600 x 360 x 395 mm

Recommended flushometer, not included: 07016.10.B (see page 228)

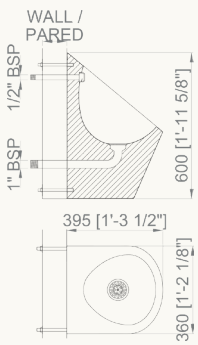

vandal-proof

Material
AISI 304 stainless steel

Acabado
SATINADO (.S)

Longitud de los pernos según espesor de muro (consúltenos)

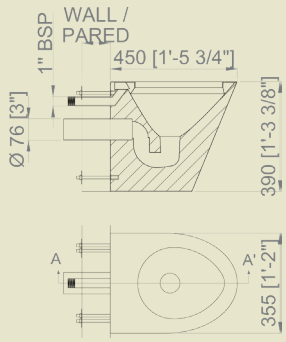

13012.P.S **1022,00 €**

Floor based toilet horizontal oulet. Wall fixing bolts included

Dimensions
390 x 355 x 450 mm

Recommended flushometer, not included: 07016.10.B (see page 228)



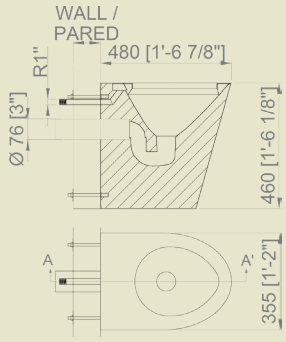

13012.PM.S **1346,00 €**

Floor based toilet, adapted, horizontal oulet. Wall fixing bolts included

Dimensions
460 x 355 x 480 mm



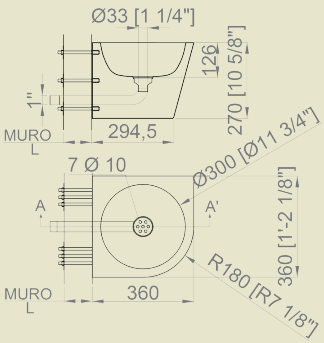

13036.P.S **469,00 €**

Wall mounted wash basin. Installation through wall, bolts included.

Dimensions
270 x 360 x 360 mm

Recommended faucet, not included: 07015.10.B (see page 228)

Recommended spout, not included: 07011.10.B (see page 229)



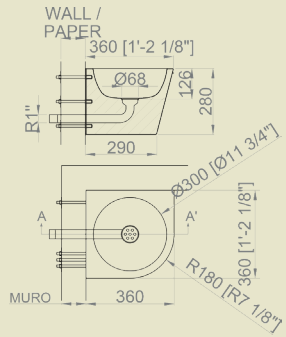

Wall mounted corner wash basin. Installation through wall, bolts included

13036.PL.S **469,00 €**

Bolts, water inlet and outlet left side

Dimensions
270 x 360 x 360 mm



13036.PR.S **469,00 €**

Bolts, water inlet and outlet right side

Dimensions
270 x 360 x 360 mm

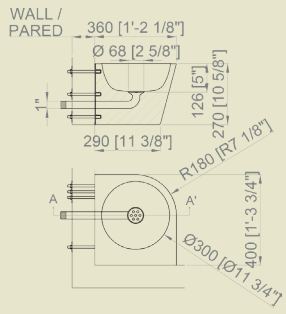

Recommended faucet, not included: 07015.10.B (see page 228)

Recommended spout, not included: 07011.10.B (see page 229)



vandal-proof

NEW



07013.K	122,00 €

Vandal proof faucet for installation through wall. Operated by push button 07084.10.B or 07085.10.B

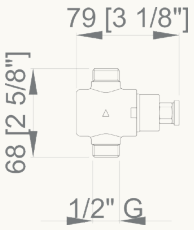

07017.2.10.B	379,00 €

Vandal-proof mixer for shower. Installation through wall. Push button included

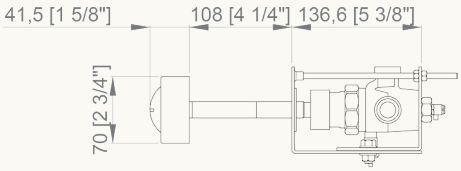

NEW



07090.B	1276,00 €

Self-closing faucet in wall with stainless steel box

Material
Faucet in chromed brass
Box in AISI 304 stainless steel

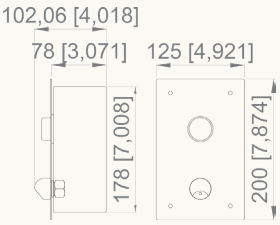



07084.10.B	130,50 €

Vandal-proof push button

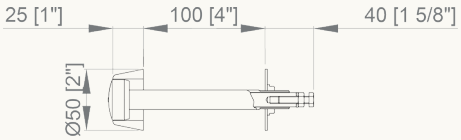



07085.10.B	130,50 €

Flat vandal-proof push button

Suitable for 07013.K, 07080.K and 07081.K.

Suitable for 10cm wall thickness.

Consult us for other thicknesses

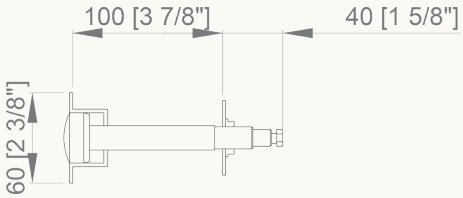

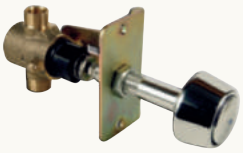

07015.10.B	273,00 €

Vandal-proof faucet with push button

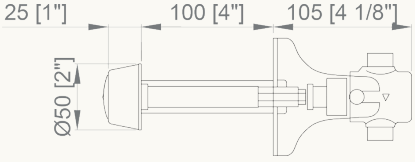



07016.10.B	314,00 €

Vandal-proof flushometer with push button

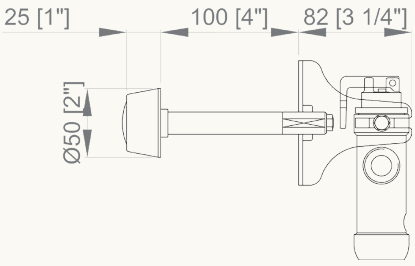

vandal-proof

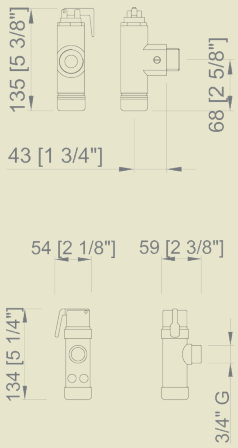

Self-closing vandal-proof flushometer. Water inlet ¾"

Installation through wall.

Operation by 07084.10.B or 07085.10.B push button

07080.K	07081.K
153,50 €	**113,00 €**
With shut-off valve	Without shut-off valve



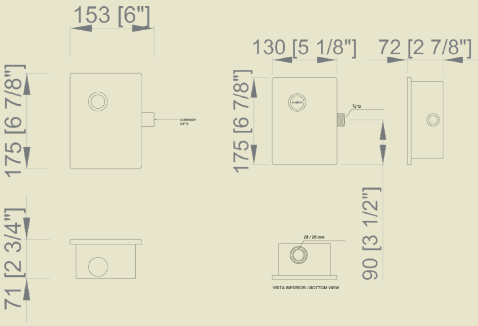

Self-closing vandal-proof flushometer. Water inlet ¾"

Flush mounted instalation

07082.B	07083.B
306,00 €	**306,00 €**
With shut-off valve	Without shut-off valve



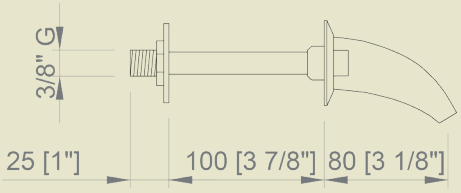

07011.10.B

101,50 €

Curved spout. Installation through wall

Suitable for 10cm wall thickness

Consult us for other thicknesses



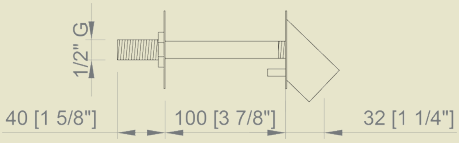

07075.10.B

149,50 €

Shower head

Suitable for 10cm wall thickness

Consult us for other thicknesses



Material
AISI 304 stainless steel

Finish
SATIN (.S)

combi toilet and sink

Vandal-proof. Suitable for installations that require a high degree of security. Includes bolts for installation through wall. Faucet not included.

Inside filled with polyurethane foam and anti-sound protection.



13123.L

1977,00 €

Toilet pan left position

Dimensions
990 x 660 x 690 mm

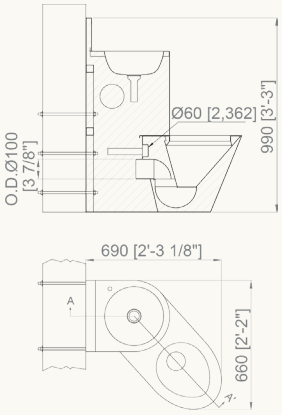



13123.C

1977,00 €

Toilet pan central position

Dimensions
990 x 358 x 855 mm

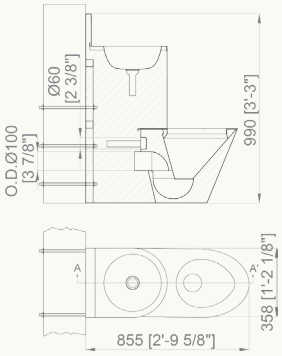



13123.R

1977,00 €

Toilet pan right position

Dimensions
990 x 660 x 690 mm

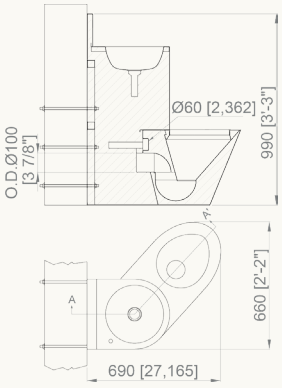

Material
AISI 304 stainless steel

Finish
SATIN (.S)

combi toilet and sink

Anti-vandal. Wall installation.

Inside filled with polyurethane foam and anti-sound protection

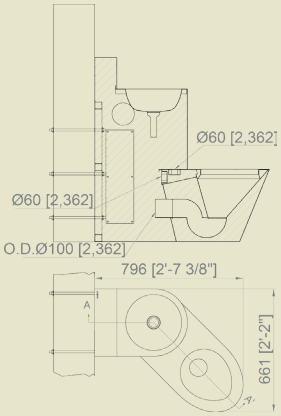

13124.L

1999,00 €

Toilet pan left position

Dimensions
990 x 661 x 796 mm



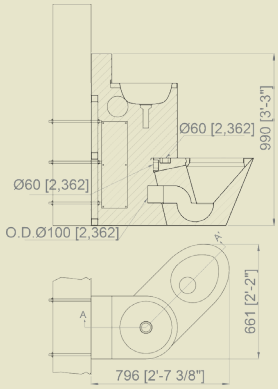

13124.R

1999,00 €

Toilet pan right position

Dimensions
990 x 661 x 796 mm



07014.B

1160,00 €

Faucet set for wash basin and toilet pan Combi units.

Self closing faucet with spout and flushometer included (both push button operated).



Stainless steel colective wash basins

made in ES



- Manufactured with stainless steel in various thicknesses (standard 1,2 and 1,5 mm) and various qualities: AISI 304 or AISI 316.
- Rounded, squared or special integrated sinks.
- Variable widths and lengths.
- Variable backsplashes and dropfronts, with and without sanitary radius.
- Variable tap and soap dispenser holes.
- Special shapes for overcome pillars, waste pipes, etc.



Sash window

GENERAL RECOMMENDATIONS ON MAINTENANCE

- All type of stainless steel can become stained or fade when in contact with some substances or when inadequate cleaning products are used.
- Surfaces of devices must always be clean so that stainless steel keeps its highest anticorrosion levels.
- Products based on strong acid solutions used in cleaning of bricks and tiles should never come into contact with stainless steel.
- Bleach and other cleaning products based on hypochlorite should not be used for cleaning stainless steel.
- Other products that should not come into contact with stainless steel are some cleaning products for bathrooms, developer liquids, acids, concentrated disinfectants, bleaches and strong alkalis such as caustic soda. If any of these liquids gets in contact with stainless steel it should be rinsed thoroughly with clean water.



Surgical wash basin

STAINLESS STEEL DAILY MAINTENANCE

For the daily cleaning of stainless steel products and toilets NOFER recommends:

1. Wash the surface with soapy water or mild detergent.
2. Rinse with clean water always.
3. Dry with a soft cloth.

There are products on the market for cleaning stainless steel surfaces, which can be used directly, providing a superb finish and protecting stainless steel surface.



Material air locks

CLEANING OF TOILETS AND URINALS

To clean and maintain the appearance of these items, use cleaning products that contain sulfamic acid sulphonamides and are recommended for cleaning stainless steel. These products remove the plaque, are bactericidal and deodorant and do not harm stainless steel. In any case, follow the instructions and precautions for use given by the manufacturer of the cleaning products.



Custom manufactured wash basins



Transfer doors



Stainless steel signage

industrial furniture

STAINLESS STEEL SINKS

FEATURES:
Industrial sinks with frame, with or without lower shelf.

DESIGN CHARACTERISTICS:

- Made of AISI 304 stainless steel
- Drawn sinks with sound insulation
- With drain valve and overflow tube
- Trim 100 mm and frontal 65 mm.
- Frame included. Four feet 40 x 40 mm. Adjustable up to 900 mm height.
- Assembly with allen fixing material (key included)
- Detachable structure to facilitate the transport and storage.
- Rear feet moved forward 50 mm for sanitary floors



Without shelf

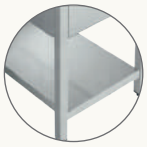

With shelf

Industrial sink with frame and 1 bowl. Height: 850 mm

LENGTH X DEPTH	Sink + frame CODE	Sink + frame PRICE	Sink + frame + shelf CODE	Sink + frame + shelf PRICE	Sink CODE	Sink PRICE	BOWL DIM.
FRAME 600							
600 x 600	11160.060.K	990,00 €	11160.060.E	1173,00 €	11160.060.F	451,00 €	500 x 400 x 250
700 x 600	11160.070.K	1081,00 €	11160.070.E	1264,00 €	11160.070.F	628,00 €	500 x 500 x 300
FRAME 700							
700 x 700	11170.070.K	1168,00 €	11170.070.E	1383,00 €	11170.070.F	647,00 €	500 x 500 x 300
800 x 700	11170.080.K	1427,00 €	11170.080.E	1669,00 €	11170.080.F	677,00 €	600 x 500 x 330
1000 x 700	11170.100.K	1795,00 €	11170.100.E	2090,00 €	11170.100.F	1155,00 €	860 x 500 x 380
1200 x 700	11170.120.K	2086,00 €	11170.120.E	2432,00 €	11170.120.F	1296,00 €	1060 x 500 x 380
1400 x 700	11170.140.K	2156,00 €	11170.140.E	2542,00 €	11170.140.F	1435,00 €	1200 x 500 x 380

Industrial sink with frame and 2 bowls. Height: 850 mm

LENGTH X DEPTH	Sink + frame CODE	Sink + frame PRICE	Sink + frame + shelf CODE	Sink + frame + shelf PRICE	Sink CODE	Sink PRICE	BOWL DIM.
FRAME 600							
1000 x 600	11260.100.K	1497,00 €	11260.100.E	1778,00 €	11260.100.F	894,00 €	400 x 400 x 250
1200 x 600	11260.120.K	1555,00 €	11260.120.E	1865,00 €	11260.120.F	936,00 €	500 x 400 x 250
1300 x 600	11260.130.K	1771,00 €	11260.130.E	2109,00 €	11260.130.F	1180,00 €	500 x 500 x 300
FRAME 700							
1000 x 700	11270.100.K	1725,00 €	11270.100.E	2020,00 €	11270.100.F	950,00 €	400 x 500 x 250
1200 x 700	11270.120.K	1814,00 €	11270.120.E	2160,00 €	11270.120.F	1041,00 €	500 x 500 x 300
1400 x 700	11270.140.K	2325,00 €	11270.140.E	2712,00 €	11270.140.F	1172,00 €	600 x 500 x 330
1800 x 700	11270.180.K	2497,00 €	11270.180.E	2994,00 €	11270.180.F	1890,00 €	800 x 500 x 380

Industrial sink with frame, 1 bowl and 1 drainer surface. Height: 850 mm

Drainer position: left

Drainer position: right

LENGTH X DEPTH	Sink + frame CODE	Sink + frame CODE	Sink + frame PRICE	Sink + frame + shelf CODE	Sink + frame + shelf CODE	Sink + frame + shelf PRICE	Sink CODE	Sink CODE	Sink PRICE	BOWL DIM.
FRAME 500										
800 x 500	112L50.080.K	112R50.080.K	593,00 €	112L50.080.E	112R50.080.E	734,00 €	112L50.080.F	112R50.080.F	216,00 €	365 x 340 x 150
1000 x 500	112L50.100.K	112R50.100.K	648,00 €	112L50.100.E	112R50.100.E	792,00 €	112L50.100.F	112R50.100.F	266,00 €	365 x 340 x 150
FRAME 550										
1000 x 550	112L55.100.K	112R55.100.K	864,00 €	112L55.100.E	112R55.100.E	1082,00 €	112L55.100.F	112R55.100.F	531,00 €	400 x 400 x 200
1200 x 550	112L55.120.K	112R55.120.K	969,00 €	112L55.120.E	112R55.120.E	1205,00 €	112L55.120.F	112R55.120.F	595,00 €	400 x 400 x 200
1400 x 550	112L55.140.K	112R55.140.K	1216,00 €	112L55.140.E	112R55.140.E	1443,00 €	112L55.140.F	112R55.140.F	783,00 €	400 x 400 x 200
FRAME 600										
1000 x 600	112L60.100.K	112R60.100.K	1160,00 €	112L60.100.E	112R60.100.E	1440,00 €	112L60.100.F	112R60.100.F	631,00 €	400 x 400 x 250
1200 x 600	112L60.120.K	112R60.120.K	1077,00 €	112L60.120.E	112R60.120.E	1387,00 €	112L60.120.F	112R60.120.F	542,00 €	500 x 400 x 250
1300 x 600	112L60.130.K	112R60.130.K	1389,00 €	112L60.130.E	112R60.130.E	1727,00 €	112L60.130.F	112R60.130.F	791,00 €	500 x 500 x 300
1400 x 600	112L60.140.K	112R60.140.K	1550,00 €	112L60.140.E	112R60.140.E	1909,00 €	112L60.140.F	112R60.140.F	751,00 €	500 x 400 x 250
FRAME 700										
1000 x 700	112L70.100.K	112R70.100.K	1368,00 €	112L70.100.E	112R70.100.E	1663,00 €	112L70.100.F	112R70.100.F	681,00 €	500 x 500 x 300
1200 x 700	112L70.120.K	112R70.120.K	1266,00 €	112L70.120.E	112R70.120.E	1612,00 €	112L70.120.F	112R70.120.F	635,00 €	500 x 500 x 300
1300 x 700	112L70.130.K	112R70.130.K	1546,00 €	112L70.130.E	112R70.130.E	1909,00 €	112L70.130.F	112R70.130.F	850,00 €	600 x 500 x 330
1400 x 700	112L70.140.K	112R70.140.K	1657,00 €	112L70.140.E	112R70.140.E	2043,00 €	112L70.140.F	112R70.140.F	800,00 €	600 x 500 x 330
1600 x 700	112L70.160.K	112R70.160.K	2253,00 €	112L70.160.E	112R70.160.E	2718,00 €	112L70.160.F	112R70.160.F	1501,00 €	860 x 500 x 380
1800 x 700	112L70.180.K	112R70.180.K	2389,00 €	112L70.180.E	112R70.180.E	2886,00 €	112L70.180.F	112R70.180.F	1670,00 €	1160 x 500 x 380
2000 x 700	112L70.200.K	112R70.200.K	2589,00 €	112L70.200.E	112R70.200.E	3120,00 €	112L70.200.F	112R70.200.F	1948,00 €	1160 x 500 x 380

industrial furniture

STAINLESS STEEL SINKS WITH BIG CAPACITY

FEATURES:

Industrial high capacity sinks with frame, with or without lower shelf

DESIGN CHARACTERISTICS:

- Made of AISI 304 stainless steel with reinforced structure
- Drawn sinks with sound insulation
- With drain valve and overflow tube
- Trim 100 mm and frontal 65 mm.
- Frame included. Four feet 40 x 40 mm. Adjustable up to 900 mm height.
- Assembly with allen fixing material (key included)
- Detachable structure to facilitate the transport and storage.
- Rear feet moved forward 50 mm for sanitary floors.



Without shelf

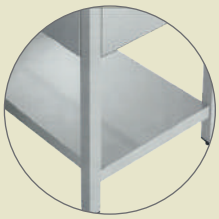

With shelf



Industrial sink with 3 bowls.
Height: 850 mm

	Sink + frame		Sink + frame + shelf		Sink		
LENGTH X DEPTH	CODE	PRICE	CODE	PRICE	CODE	PRICE	BOWL DIM.
FRAME 700							
1800 x 700	11370.180.K	2725,00 €	11370.180.E	3221,00 €	11370.180.F	1554,00 €	500 x 500 x 300



Industrial sink with 2 bowls and 2 drainer surfaces.
Height: 850 mm

	Sink + frame		Sink + frame + shelf		Sink		
LENGTH X DEPTH	CODE	PRICE	CODE	PRICE	CODE	PRICE	BOWL DIM.
FRAME 600							
2000 x 600	11460.200.K	2181,00 €	11460.200.E	2661,00 €	11460.200.F	1154,00 €	500 x 400 x 250
FRAME 700							
2200 x 700	11470.220.K	2091,00 €	11470.220.E	2554,00 €	11470.220.F	1390,00 €	600 x 500 x 300

Industrial sink with 2 bowls and 1 drainer surface



Drainer position: left



Drainer position: right

	Sink + frame			Sink + frame + shelf			Sink			
LENGTH X DEPTH	CODE ■□□	CODE □□■	PRICE	CODE ■□□	CODE □□■	PRICE	CODE ■□□	CODE □□■	PRICE	BOWL DIM.
FRAME 500										
1200 x 500	113L50.120.K	113R50.120.K	737,00 €	113L50.120.E	113R50.120.E	934,00 €	113L50.120.F	113R50.120.F	364,00 €	365 x 340 x 150
1350 x 500	113L50.135.K	113R50.135.K	783,00 €	113L50.135.E	113R50.135.E	996,00 €	113L50.135.F	113R50.135.F	396,00 €	365 x 340 x 150
FRAME 600										
1400 x 600	113L60.140.K	113R60.140.K	1650,00 €	113L60.140.E	113R60.140.E	2009,00 €	113L60.140.F	113R60.140.F	936,00 €	400 x 400 x 250
1600 x 600	113L60.160.K	113R60.160.K	1759,00 €	113L60.160.E	113R60.160.E	2215,00 €	113L60.160.F	113R60.160.F	1024,00 €	500 x 400 x 250
1800 x 600	113L60.180.K	113R60.180.K	1916,00 €	113L60.180.E	113R60.180.E	2379,00 €	113L60.180.F	113R60.180.F	1114,00 €	500 x 400 x 300
2000 x 600	113L60.200.K	113R60.200.K	1753,00 €	113L60.200.E	113R60.200.E	2201,00 €	113L60.200.F	113R60.200.F	1154,00 €	500 x 400 x 300
FRAME 700										
1600 x 700	113L70.160.K	113R70.160.K	2009,00 €	113L70.160.E	113R70.160.E	2474,00 €	113L70.160.F	113R70.160.F	1076,00 €	500 x 500 x 300
1800 x 700	113L70.180.K	113R70.180.K	2151,00 €	113L70.180.E	113R70.180.E	2648,00 €	113L70.180.F	113R70.180.F	1224,00 €	500 x 500 x 300
2000 x 700	113L70.200.K	113R70.200.K	1958,00 €	113L70.200.E	113R70.200.E	2405,00 €	113L70.200.F	113R70.200.F	1324,00 €	600 x 500 x 300

industrial furniture

INDUSTRIAL TABLES

Industrial tables with trim



Without shelf

Industrial tables with trim and shelf



With shelf

LENGTH	CODE	PRICE	CODE	PRICE	CODE	PRICE	CODE	PRICE	CODE	PRICE	CODE	PRICE	CODE	PRICE	CODE	PRICE
	FRAME 500				FRAME 550				FRAME 600				FRAME 700			
600	11550.060.K	637,00 €	11550.060.E	675,00 €	11555.060.K	675,00 €	11555.060.E	733,00 €	11560.060.K	759,00 €	11560.060.E	1399,00 €	11570.060.K	739,00 €	11570.060.E	790,00 €
800	11550.080.K	650,00 €	11550.080.E	711,00 €	11555.080.K	731,00 €	11555.080.E	781,00 €	11560.080.K	778,00 €	11560.080.E	817,00 €	11570.080.K	788,00 €	11570.080.E	813,00 €
1000	11550.100.K	691,00 €	11550.100.E	728,00 €	11555.100.K	761,00 €	11555.100.E	803,00 €	11560.100.K	805,00 €	11560.100.E	840,00 €	11570.100.K	915,00 €	11570.100.E	962,00 €
1200	11550.120.K	720,00 €	11550.120.E	756,00 €	11555.120.K	781,00 €	11555.120.E	833,00 €	11560.120.K	840,00 €	11560.120.E	871,00 €	11570.120.K	884,00 €	11570.120.E	952,00 €
1400	11550.140.K	773,00 €	11550.140.E	820,00 €	11555.140.K	850,00 €	11555.140.E	902,00 €	11560.140.K	908,00 €	11560.140.E	908,00 €	11570.140.K	1008,00 €	11570.140.E	1018,00 €
1500	11550.150.K	805,00 €	11550.150.E	856,00 €	11555.150.K	906,00 €	11555.150.E	969,00 €	11560.150.K	935,00 €	11560.150.E	987,00 €	11570.150.K	997,00 €	11570.150.E	1118,00 €
1600	11550.160.K	827,00 €	11550.160.E	875,00 €	11555.160.K	963,00 €	11555.160.E	1030,00 €	11560.160.K	954,00 €	11560.160.E	967,00 €	11570.160.K	1049,00 €	11570.160.E	1130,00 €
1800	11550.180.K	911,00 €	11550.180.E	972,00 €	11555.180.K	1018,00 €	11555.180.E	1092,00 €	11560.180.K	1027,00 €	11560.180.E	1122,00 €	11570.180.K	1141,00 €	11570.180.E	1273,00 €
2000	11550.200.K	972,00 €	11550.200.E	1028,00 €	11555.200.K	1074,00 €	11555.200.E	1154,00 €	11560.200.K	1151,00 €	11560.200.E	1168,00 €	11570.200.K	1300,00 €	11570.200.E	1392,00 €
2200	11550.220.K	1241,00 €	11550.220.E	1297,00 €	11555.220.K	1343,00 €	11555.220.E	1405,00 €	11560.220.K	1341,00 €	11560.220.E	1450,00 €	11570.220.K	1431,00 €	11570.220.E	1558,00 €
2400	11550.240.K	1297,00 €	11550.240.E	1355,00 €	11555.240.K	1399,00 €	11555.240.E	1467,00 €	11560.240.K	1425,00 €	11560.240.E	1482,00 €	11570.240.K	1466,00 €	11570.240.E	1589,00 €

Wall mounted low table with trim and shelf.
Height: 600 mm

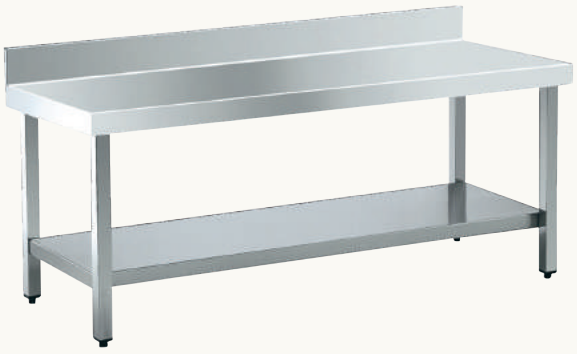

CODE	PRICE	LENGTH X DEPTH	CODE	PRICE	LENGTH X DEPTH
FRAME 600			FRAME 700		
115A60.080.E	923,00 €	800 x 600	115A70.080.E	956,00 €	800 x 600
115A60.100.E	950,00 €	1000 x 600	115A70.100.E	1027,00 €	1000 x 600
115A60.120.E	985,00 €	1200 x 600	115A70.120.E	1112,00 €	1200 x 600
115A60.140.E	1068,00 €	1400 x 600	115A70.140.E	1195,00 €	1400 x 600
115A60.160.E	1137,00 €	1600 x 600	115A70.160.E	1276,00 €	1600 x 600

Corner table with trim and shelf



FRAME 600

115Y60.E

1191,00 €

Dimensions
600 x 600 x 850 mm

FRAME 700

115Y70.E

1305,00 €

Dimensions
700 x 700 x 850 mm

INDUSTRIAL TABLES

Central tables. Height: 850 mm



Without shelf

Central tables with shelf. Height: 850 mm



With shelf

LENGTH	CODE	PRICE	CODE	PRICE	CODE	PRICE	CODE	PRICE	CODE	PRICE	CODE	PRICE	CODE	PRICE	CODE	PRICE
	FRAME 500				FRAME 550				FRAME 600				FRAME 700			
600	11650.060.K	633,00 €	11650.060.E	699,00 €	11655.060.K	675,00 €	11655.060.E	733,00 €	11660.060.K	748,00 €	11660.060.E	771,00 €	11670.060.K	738,00 €	11670.060.E	775,00 €
800	11650.080.K	657,00 €	11650.080.E	697,00 €	11655.080.K	731,00 €	11655.080.E	781,00 €	11660.080.K	763,00 €	11660.080.E	802,00 €	11670.080.K	765,00 €	11670.080.E	823,00 €
1000	11650.100.K	675,00 €	11650.100.E	717,00 €	11655.100.K	761,00 €	11655.100.E	803,00 €	11660.100.K	782,00 €	11660.100.E	825,00 €	11670.100.K	815,00 €	11670.100.E	871,00 €
1200	11650.120.K	701,00 €	11650.120.E	737,00 €	11655.120.K	781,00 €	11655.120.E	833,00 €	11660.120.K	813,00 €	11660.120.E	848,00 €	11670.120.K	810,00 €	11670.120.E	865,00 €
1400	11650.140.K	769,00 €	11650.140.E	811,00 €	11655.140.K	850,00 €	11655.140.E	902,00 €	11660.140.K	879,00 €	11660.140.E	933,00 €	11670.140.K	952,00 €	11670.140.E	1045,00 €
1500	11650.150.K	795,00 €	11650.150.E	841,00 €	11655.150.K	906,00 €	11655.150.E	969,00 €	11660.150.K	860,00 €	11660.150.E	930,00 €	11670.150.K	971,00 €	11670.150.E	1060,00 €
1600	11650.160.K	825,00 €	11650.160.E	856,00 €	11655.160.K	963,00 €	11655.160.E	1030,00 €	11660.160.K	899,00 €	11660.160.E	949,00 €	11670.160.K	987,00 €	11670.160.E	1080,00 €
1800	11650.180.K	884,00 €	11650.180.E	941,00 €	11655.180.K	1018,00 €	11655.180.E	1092,00 €	11660.180.K	1035,00 €	11660.180.E	1101,00 €	11670.180.K	1105,00 €	11670.180.E	1247,00 €
2000	11650.200.K	947,00 €	11650.200.E	1002,00 €	11655.200.K	1074,00 €	11655.200.E	1154,00 €	11660.200.K	1091,00 €	11660.200.E	1164,00 €	11670.200.K	1203,00 €	11670.200.E	1305,00 €
2200	11650.220.K	1216,00 €	11650.220.E	1271,00 €	11655.220.K	1343,00 €	11655.220.E	1405,00 €	11660.220.K	1268,00 €	11660.220.E	1369,00 €	11670.220.K	1394,00 €	11670.220.E	1469,00 €
2400	11650.240.K	1276,00 €	11650.240.E	1332,00 €	11655.240.K	1399,00 €	11655.240.E	1467,00 €	11660.240.K	1342,00 €	11660.240.E	1408,00 €	11670.240.K	1454,00 €	11670.240.E	1527,00 €

LENGTH	CODE	PRICE	LENGTH	CODE	PRICE
	FRAME 800				
1000	11680.100.E	993,00 €	1600	11680.160.E	1215,00 €
1200	11680.120.E	1014,00 €	1800	11680.180.E	1423,00 €
1400	11680.140.E	1176,00 €	2000	11680.200.E	1466,00 €

Wall mounted low table with shelf. Height: 600 mm



LENGTH	CODE	PRICE	CODE	PRICE
	FRAME 600		FRAME 700	
800	116A60.080.E	906,00 €	116A70.080.E	929,00 €
1000	116A60.100.E	933,00 €	116A70.100.E	985,00 €
1200	116A60.120.E	958,00 €	116A70.120.E	1018,00 €
1400	116A60.140.E	1054,00 €	116A70.140.E	1180,00 €
1600	116A60.160.E	1114,00 €	116A70.160.E	1220,00 €

industrial furniture

CHEF TABLES

Drain valve and overflow tube included.
Wall mounted chef tables with trim and integrated 200 x 400 x 340 mm bowl. Height: 850 mm

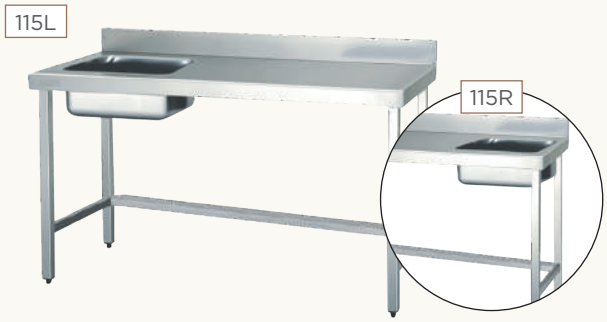

CODE	PRICE	LENGTH X DEPTH
FRAME 600		
115L60.120.K	1047,00 €	1200 x 600
115L60.140.K	1137,00 €	1400 x 600
115L60.160.K	1207,00 €	1600 x 600
115L60.180.K	1318,00 €	1800 x 600
115R60.120.K	1047,00 €	1200 x 600
115R60.140.K	1137,00 €	1400 x 600
115R60.160.K	1207,00 €	1600 x 600
115R60.180.K	1318,00 €	1800 x 600

CODE	PRICE	LENGTH X DEPTH
FRAME 700		
115L70.120.K	1327,00 €	1200 x 700
115L70.140.K	1380,00 €	1400 x 700
115L70.160.K	1450,00 €	1600 x 700
115L70.180.K	1569,00 €	1800 x 700
115R70.120.K	1327,00 €	1200 x 700
115R70.140.K	1380,00 €	1400 x 700
115R70.160.K	1450,00 €	1600 x 700
115R70.180.K	1569,00 €	1800 x 700

Drain valve and overflow tube included.
Wall mounted chef tables with trim, shelf and integrated 200 x 400 x 340 mm bowl. Height: 850 mm

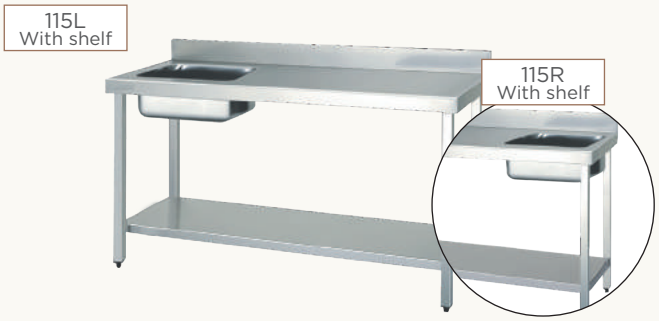

CODE	PRICE	LENGTH X DEPTH
FRAME 600		
115L60.120.E	1201,00 €	1200 x 600
115L60.140.E	1346,00 €	1400 x 600
115L60.160.E	1433,00 €	1600 x 600
115L60.180.E	1500,00 €	1800 x 600
115R60.120.E	1201,00 €	1200 x 600
115R60.140.E	1346,00 €	1400 x 600
115R60.160.E	1433,00 €	1600 x 600
115R60.180.E	1500,00 €	1800 x 600

CODE	PRICE	LENGTH X DEPTH
FRAME 700		
115L70.120.E	1490,00 €	1200 x 700
115L70.140.E	1542,00 €	1400 x 700
115L70.160.E	1626,00 €	1600 x 700
115L70.180.E	1810,00 €	1800 x 700
115R70.120.E	1490,00 €	1200 x 700
115R70.140.E	1542,00 €	1400 x 700
115R70.160.E	1626,00 €	1600 x 700
115R70.180.E	1810,00 €	1800 x 700

SPECIAL FURNISHING



Sink with frame and door. Height: 850 mm

LENGTH X DEPTH	CODE	CODE	PRICE
FRAME 550			
1000 x 550	114Z55L.100.K	114Z55R.100.K	1661,00 €
1200 x 550	114Z55L.120.K	114Z55R.120.K	1768,00 €
1400 x 550	114Z55L.140.K	114Z55R.140.K	1890,00 €

Sink with frame and door batiente. Height: 850 mm

LENGTH X DEPTH	CODE	PRICE
FRAME 600		
600 x 600	114Z60.060.K	1383,00 €
FRAME 700		
700 x 700	114Z70.060.K	1776,00 €

Sink with frame and hinged door. Height: 850 mm

LENGTH X DEPTH	CODE	CODE	PRICE	CODE	PRICE
FRAME 600					
1000 x 600	114Z60L.100.K	114Z60R.100.K	1840,00 €	114Z60X.100.K	2067,00 €
1200 x 600	114Z60L.120.K	114Z60R.120.K	1862,00 €	114Z60X.120.K	2195,00 €
1400 x 600	114Z60L.140.K	114Z60R.140.K	2131,00 €		
FRAME 700					
1000 x 700	114Z70L.100.K	114Z70R.100.K	1930,00 €	114Z70X.100.K	2166,00 €
1200 x 700	114Z70L.120.K	114Z70R.120.K	2036,00 €	114Z70X.120.K	2387,00 €
1300 x 700	114Z70L.130.K	114Z70R.130.K	2224,00 €		
1400 x 700	114Z70L.140.K	114Z70R.140.K	2235,00 €	114Z70X.140.K	2544,00 €

LENGTH X DEPTH	CODE	CODE	PRICE	CODE	PRICE
FRAME 600					
1400 x 600	114Z60L2.140.K	114Z60R2.140.K	2235,00 €		
1600 x 600	114Z60L2.160.K	114Z60R2.160.K	2390,00 €		
1800 x 600	114Z60L2.180.K	114Z60R2.180.K	2665,00 €		
2000 x 600				114Z60X2.200.K	2810,00 €

LENGTH X DEPTH	CODE	CODE	PRICE	CODE	PRICE
FRAME 700					
1600 x 700	114Z70L2.160.K	114Z70R2.160.K	2579,00 €		
1800 x 700	114Z70L2.180.K	114Z70R2.180.K	2768,00 €	114Z70X3.180.K	3069,00 €
2000 x 700		114Z70R2.200.K	3169,00 €		

Additional technical information on www.nofer.com

industrial furniture

SPECIAL FURNISHING



Sink with frame, door and space for dishwasher. Height: 850 mm

LENGTH X DEPTH	CODE	CODE	PRICE
FRAME 500			
1000 x 500	114V50L.100.K	114V50R.100.K	1221,00 €
1350 x 500	114V50L.135.K	114V50R.135.K	1589,00 €

LENGTH X DEPTH	CODE	CODE	PRICE
FRAME 550			
1200 x 550	114V55L.120.K	114V55R.120.K	1750,00 €
1400 x 550	114V55L.140.K	114V55R.140.K	1992,00 €

Sink with frame and hinged door. Height: 850 mm

LENGTH X DEPTH	CODE	CODE	PRICE
FRAME 600			
1200 x 600	114V60L.120.K	114V60R.120.K	2071,00 €
1400 x 600	114V60L.140.K	114V60R.140.K	2025,00 €

LENGTH X DEPTH	CODE	CODE	PRICE
FRAME 700			
1200 x 700	114V70L.120.K	114V70R.120.K	1601,00 €
1400 x 700	114V70L.140.K	114V70R.140.K	2060,00 €

Sink with frame and door corredera. Height: 850 mm

LENGTH X DEPTH	CODE	CODE	PRICE
FRAME 600			
1800 x 600	114V60L2.180.K	114V60R2.180.K	2379,00 €

LENGTH X DEPTH	CODE	CODE	PRICE
FRAME 700			
1800 x 700	114V70L2.180.K	114V70R2.180.K	2565,00 €



Without shelf



With shelf

Sink with frame and space for dishwasher. Height: 850 mm

	Sink + frame			Sink + frame + shelf		
LENGTH X DEPTH	CODE	CODE	PRICE	CODE	CODE	PRICE
FRAME 550						
1200 x 550	114S55L.120.K	114S55R.120.K	958,00 €	114S55L.120.E	114S55R.120.E	1100,00 €
1400 x 550	114S55L.140.K	114S55R.140.K	1204,00 €	114S55L.140.E	114S55R.140.E	1377,00 €
FRAME 600						
1200 x 600	114S60L.120.K	114S60R.120.K	877,00 €	114S60L.120.E	114S60R.120.E	1046,00 €
1400 x 600	114S60L.140.K	114S60R.140.K	1182,00 €	114S60L.140.E	114S60R.140.E	1393,00 €
1800 x 600	114S60L2.180.K	114S60R2.180.K	1714,00 €	114S60L2.180.E	114S60R2.180.E	1940,00 €
FRAME 700						
1200 x 700	114S70L.120.K	114S70R.120.K	1022,00 €	114S70L.120.E	114S70R.120.E	1191,00 €
1400 x 700	114S70L.140.K	114S70R.140.K	1233,00 €	114S70L.140.E	114S70R.140.E	1496,00 €
1800 x 700	114S70L2.180.K	114S70R2.180.K	1795,00 €	114S70L2.180.E	114S70R2.180.E	2155,00 €



industrial furniture

SPECIAL FURNISHING



115Z40.100.S **1445,00 €**

Wall cabinet with sliding doors and draining rack

Dimensions
400 x 1000 x 600 mm



11560.100.S **1235,00 €**

Counter with one shelf

Dimensions
1050 x 1000 x 600 mm



11527.S
980,00 €

Cutting table

Dimensions
850 x 500 x 500 mm



Module with three drawers

11509.60.S
1111,00 €

Dimensions
510 x 465 x 590 mm

11509.70.S
1162,00 €

Dimensions
610 x 465 x 590 mm



11508.S
374,00 €

High capacity drawer

Dimensions
150 x 460 x 450 mm



11510.S
493,00 €

Spare wheels, four units pack



11532.K **68,00 €**

Trim ring for hole in clearing tables and sinks

Material
Caucho de alta densidad

Dimensions
Ø 200 mm



11530.S
1081,00 €

Cleaner's sink

Dimensions
500 x 600 x 600 mm

Material
AISI 304 stainless steel

Finish
SATIN (.S)

compact units

NEW

Compact furniture AISI 304 stainless steel for the equipment in public toilets in which the organization of space is essential.

Combines different uses in one spot: dispenser for paper towels, paper, toilet paper, toilet rings and soap.



12012.S

534,00 €

A compact half-embedded wall cabinet with paper towel dispenser and trash bin. Paper towel dispenser with automatic output and manual cut. Operates with batteries.

Dimensions
1375 x 365 x 160 mm

Rough wall opening dimensions
1331 x 330 x 160 mm

Maximum roll
Ø 200 x 220 mm

Bin capacity
22,5 litres

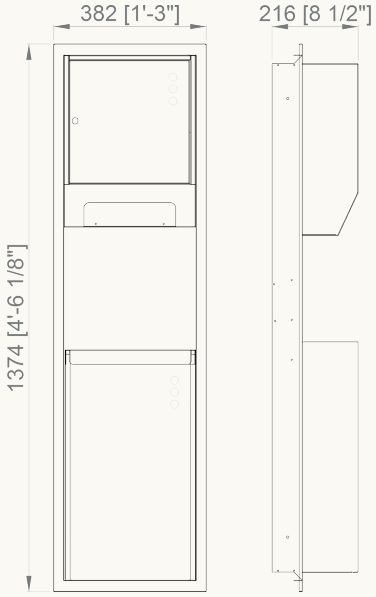



12012.ADO.S

296,00 €

Surface mounted kit for unit 12012.S

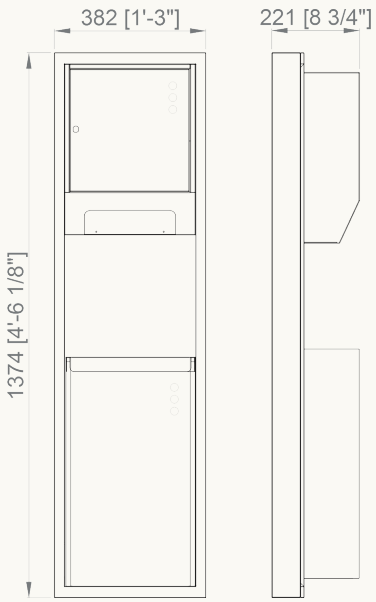

compact units

Material
AISI 304 stainless steel

Finish
SATIN (.S)

NEW



12020.S

871,00 €

Compact cabinet recessed in wall with paper towel dispenser and trash bin

Dimensions
1375 x 365 x 160 mm

Rough wall opening dimensions
1331 x 330 x 160 mm

Bin capacity
22,5 litres

Towel paper dispenser capacity
700 uses

12020.ADO.S

288,00 €

Surface mounted kit for unit 12020.S



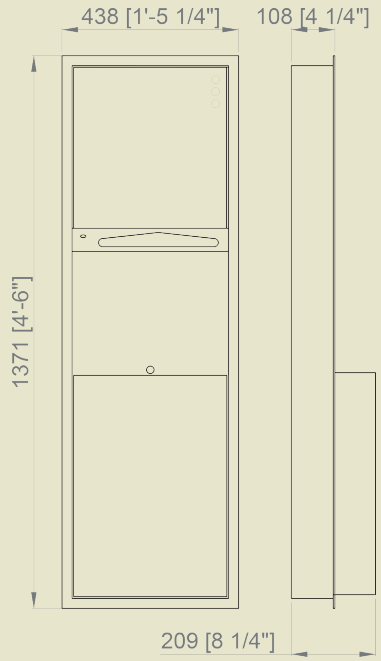

12021.S

765,00 €

Compact cabinet recessed in wall with paper towel dispenser and large-capacity bin

Dimensions
1371 x 438 x 180 mm
(98 mm flush mounted)

Rough wall opening dimensions
1334 x 400 x 108 mm

Bin capacity
45 litres

Towel paper dispenser capacity
700 uses

12021.ADO.S

290,50 €

Surface mounted kit for unit 12021.S



Material
AISI 304 stainless steel

Finish
SATIN (.S)

compact units



12020.P.S

804,00 €

Compact cabinet recessed in wall with paper towel dispenser and bin. Front door in one piece

Dimensions
1400 x 350 x 110 mm

Rough wall opening dimensions
1321 x 315 x 150 mm

Bin capacity
17 litres

Capacity dispenser
700 uses

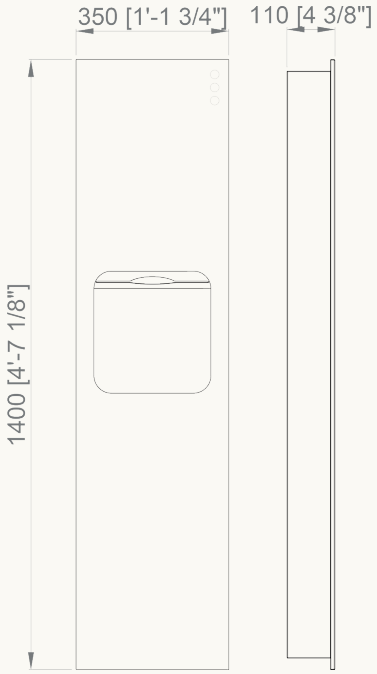

12020.ADO.P.S

290,50 €

Surface mounted kit for unit 12020.P.S



12001.S

263,00 €

Paper bin recessed in wall with self-closing hinged door

Dimensions
432 x 330 x 114 mm

Rough wall opening dimensions
392 x 290 x 114 mm

Capacity
5,5 litres

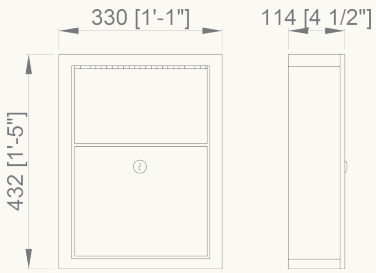

Additional technical information on www.nofer.com

Material
AISI 304 stainless steel

Finish
SATIN (.S)

compact units

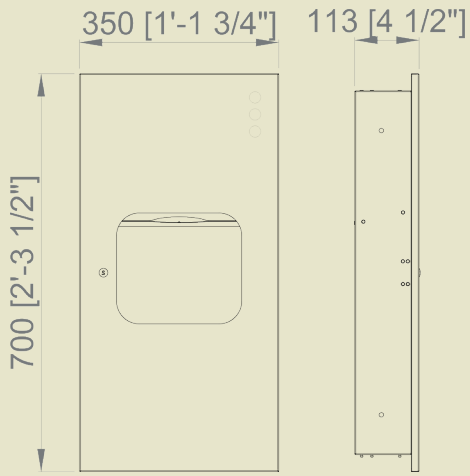

12047.P.S

411,00 €

Compact cabinet recessed in wall with paper towel dispenser and paper bin. Front door in one piece

Dimensions
700 x 350 x 113 mm

Rough wall opening dimensions
660 x 320 x 113 mm

Bin capacity
6 litres

Capacity dispenser
400 uses



12047.ADO.P.S

146,50 €

Surface mounted kit for unit 12047.P.S

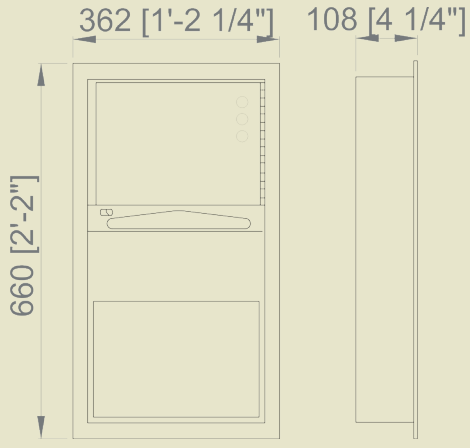

12047.S

412,00 €

Compact cabinet recessed in wall with paper towel dispenser and trash bin

Dimensions
660 x 362 x 108 mm

Rough wall opening dimensions
620 x 320 x 108 mm

Bin capacity
7,5 litres

Capacity dispenser
400 uses



12047.ADO.S

146,50 €

Surface mounted kit for unit 12021.S

Material
AISI 304 stainless steel

Finish
SATIN (.S)

compact units



12031.S

786,00 €

Compact cabinet recessed in wall with two toilet paper roll holders, with folding door with automatic closing and toilet rings dispenser

Dimensions
832 x 438 x 108 mm

Rough wall opening dimensions
840 x 400 x 108 mm

Bin capacity
7,5 litres

Capacity dispenser
500 uses

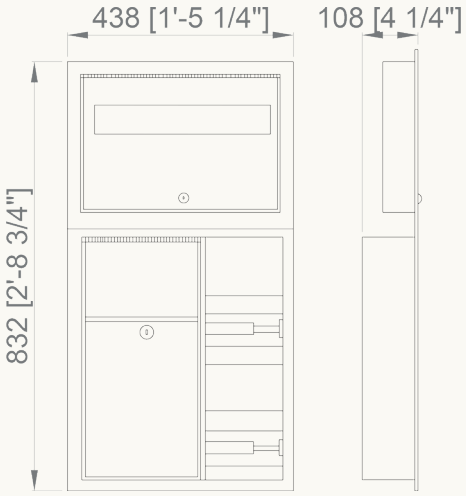



12035.S

637,00 €

Compact cabinet recessed in wall with two toilet paper roll holders and with automatic self-closing hinged door

Dimensions
508 x 438 x 107 mm

Rough wall opening dimensions
470 x 400 x 108 mm

Bin capacity
7,5 litres

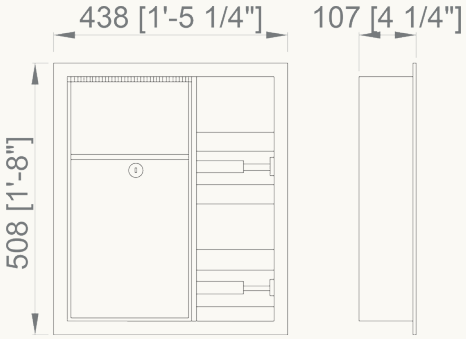



12008.P.S

371,00 €

Compact embedded Wall cabinet with paper towel dispenser

Dimensions
450 x 350 x 115 mm

Rough wall opening dimensions
407 x 320 x 110 mm

Capacity dispenser
400 uses

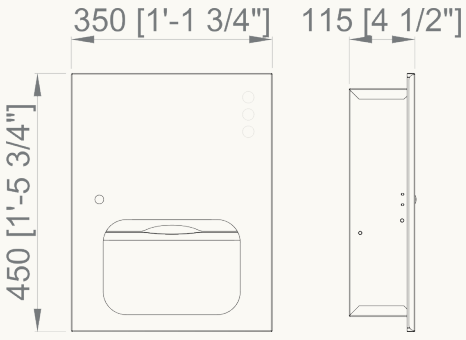

Additional technical information on www.nofer.com

Material
AISI 304 stainless steel

Finish
SATIN (.S)

compact units

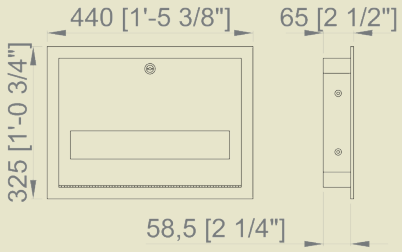

12029.S

212,00 €

Compact cabinet recessed in wall with two toilet paper roll holders with automatic self-closing hinged door

Dimensions
508 x 438 x 108 mm

Rough wall opening dimensions
470 x 400 x 108 mm

Capacity dispenser
250 uses



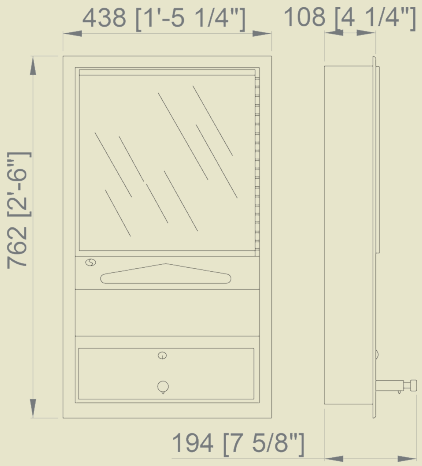

12010.S

833,00 €

Compact cabinet recessed wall with dispenser for paper towels and dispenser of liquid soap. Mirror on front door

Dimensions
762 x 438 x 108 mm

Rough wall opening dimensions
720 x 400 x 108 mm

Capacity dispenser
700 uses



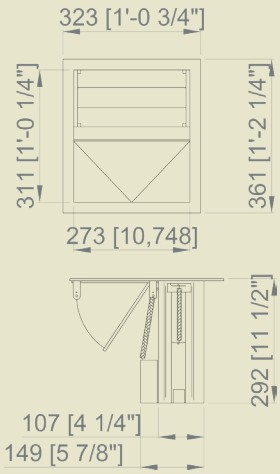

12041.S

586,00 €

Compact cabinet recessed in countertop with paper towel dispenser and folding door to trash bin (trash bin not included)

Dimensions
361 x 323 x 292 mm

Rough wall opening dimensions
279 x 318 mm

Capacity dispenser
350 uses



- CESTINI - PAPELEIRAS - PAPELERAS - WASTEPAPER BINS - POUBELLES - CESTINI - PAPELEIRAS - **PAPELERAS** - WASTEPAPER BINS - POUBELLES - CESTINI - PAPELEIRAS - PAPELERAS - WASTEPAPER BINS - POUBELLES - CESTINI - PAPELEIRAS - PAPELERAS - **WASTEPAPER BINS** - POUBELLES - CESTINI - PAPELEIRAS - PAPELERAS - WASTEPAPER BINS - POUBELLES - CESTINI - PAPELEIRAS - PAPELERAS - WASTEPAPER BINS - **POUBELLES** - CESTINI - PAPELEIRAS - PAPELERAS - WASTEPAPER BINS - POUBELLES - CESTINI - PAPELEIRAS - PAPELERAS - WASTEPAPER BINS - POUBELLES - CESTINI - PAPELEIRAS - PAPELERAS - WASTEPAPER BINS - POUBELLES - **CESTINI** - PAPELEIRAS - PAPELERAS - WASTEPAPER BINS - POUBELLES - CESTINI - PAPELEIRAS - PAPELERAS - WASTEPAPER BINS - POUBELLES - CESTINI - PAPELEIRAS - PAPELERAS - WASTEPAPER BINS - POUBELLES - CESTINI - PAPELEIRAS - PAPELERAS - WASTEPAPER BINS - POUBELLES - **PAPELEIRAS** - PAPELERAS - WASTEPAPER BINS - POUBELLES - CESTINI - PAPELEIRAS - PAPELERAS - WASTEPAPER BINS - POUBELLES - CESTINI -



“All cultures, one way or another, reflect common human needs.”

Anonymous



...regardless of their origin, race,
their customs, their limitations...

NOFER®

paper bins

Material
AISI 304 stainless steel

Finish
SATIN (.S)
POLISH (.B)

BINS WITHOUT COVER



14073.SC.S
507,00 €

Bin without cover and inner containers

Dimensions
800 mm, Ø 470 mm

Capacity
150 litres





Bin without cover and inner containers

14071.80.SC.S
201,00 €

Dimensions
645 mm, Ø 377 mm
Capacity
80 litres

14071.50.SC.S
190,80 €

Dimensions
560 mm, Ø 340 mm
Capacity
50 litres

14071.15.SC.S
107,00 €

Dimensions
320 mm, Ø 250 mm
Capacity
15 litres





Bin without cover

14075.40.SC.B
169,50 €

Dimensions
500 x 320 x 260 mm
Capacity
40 litres

14075.65.SC.B
226,90 €

Dimensions
650 x 314 x 248 mm
Capacity
65 litres

14075.80.SC.B
306,00 €

Dimensions
740 x 360 x 360 mm
Capacity
80 litres

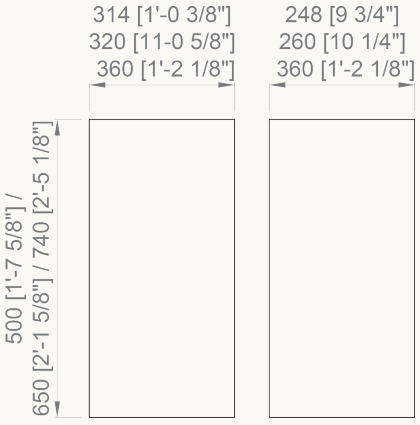

Additional technical information on www.nofer.com

paper bins

Material
AISI 304 stainless steel

Finish
SATIN (.S)
POLISH (.B)

BINS WITH COVER



14073.S

863,00 €

Painted galvanized steel waste bin for recycling with three individual interior containers

Dimensions
865 mm, Ø 470 mm

Cover finish
POLISH

Capacity
150 litres



Bin with cover

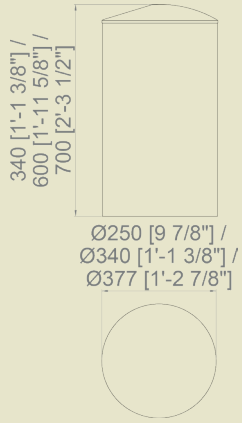

14071.80.S

408,00 €

Dimensions
700 mm, Ø 377 mm

Capacity
80 litres

14071.50.S

335,50 €

Dimensions
600 mm, Ø 340 mm

Capacity
50 litres

14071.15.S

301,00 €

Dimensions
340 mm, Ø 250 mm

Capacity
15 litres



Bin with cover

Cover finish
POLISH

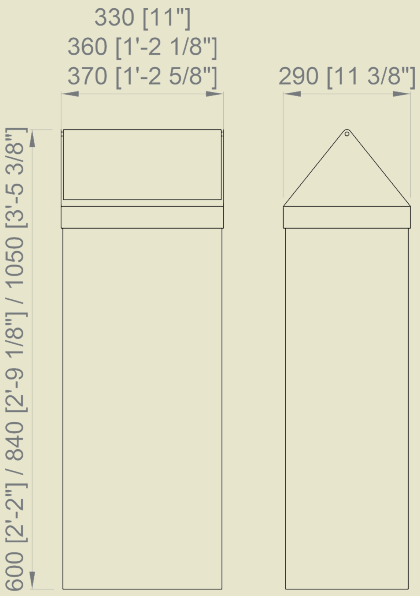

14075.40.B

232,00 €

Dimensions
660 x 330 x 280 mm

Capacity
40 litres

14075.65.B

324,50 €

Dimensions
840 x 360 x 280 mm

Capacity
65 litres

14075.80.B

416,50 €

Dimensions
1050 x 370 x 290 mm

Capacity
80 litres



paper bins

Material
AISI 304 stainless steel

Finish
SATIN (.S)
POLISH (.B)

BINS WITH COVER



14118.2.W
171,50 €

Material
Painted steel (see color chart)

Dimensions
650 x 315 x 216 mm

Capacity
40 litres

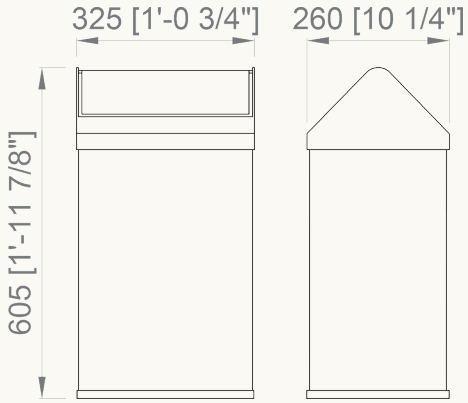



14118.S
255,00 €

Material
Stainless steel

Dimensions
680 x 320 x 260 mm

Capacity
40 litres

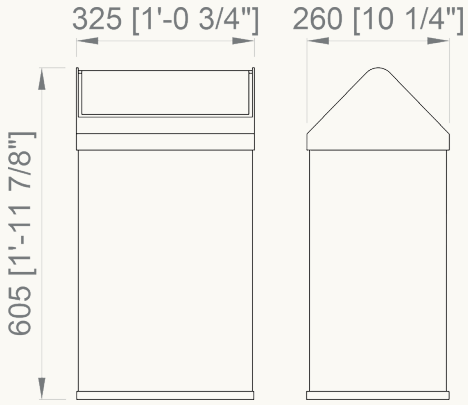

PUSH-OPEN BINS



14114.B
40,60 €

Dimensions
400 mm, Ø 200 mm

Capacity
10 litres

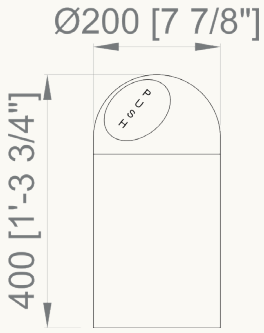



14115.S
212,00 €

Dimensions
740 mm, Ø 380 mm

Capacity
40 litres

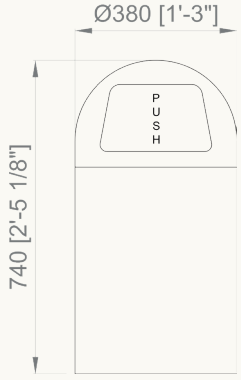

Additional technical information on www.nofer.com

paper bins

Finish
SATIN (.S)
POLISH (.B)
WHITE (.W)

HYGIENIC PEDAL BINS

Hygienic pedal bin. Inner plastic bucket with handle.

Material
Stainless steel for finishes.S and .B
Steel for .W



Dimensions	Capacity						
257 mm, Ø 170 mm	3 litres	09100.S	23,50 €	09100.B	20,80 €	09100.W	21,85 €
270 mm, Ø 205 mm	5 litres	09101.S	31,20 €	09101.B	26,00 €	09101.W	29,10 €
390 mm, Ø 250 mm	12 litres	09102.S	43,70 €	09102.B	37,50 €	09102.W	41,60 €
456 mm, Ø 293 mm	20 litres	09103.S	68,70 €	09103.B	68,70 €	09103.W	79,20 €
625 mm, Ø 293 mm	30 litres	09104.S	80,10 €	09104.B	76,70 €	09104.W	97,30 €



09110.S	09110.B
50,70 €	52,70 €

Material
Stainless steel

Dimensions
395 x 275 x 223 mm

Capacity
12 litres



14082.2.W
23,80 €

Material
Painted steel
(see color chart)

Dimensions
300 mm height, Ø 210 mm

Capacity
12 litres



14096.2.S
75,70 €

Bin with handles

Material
Stainless steel

Dimensions
300 mm Ø 210 mm

Capacity
12 litres

White Beige Red Bordeaux Blue Dark green Green Grey Rust Black

paper bins

Finish
SATIN (.S)
POLISH (.B)
WHITE (.W)

WALL MOUNTED BIN

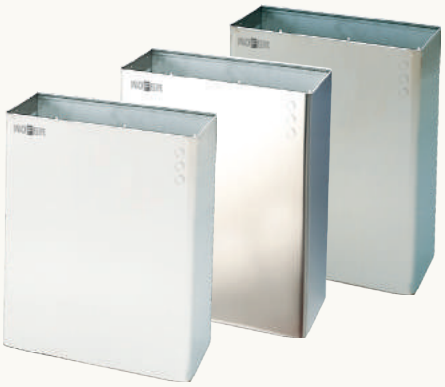

14077.S	14077.B
100,50 €	116,50 €

14077.W
100,50 €

Wall mounted bin without cover

Material
AISI 304 stainless steed.
White version epoxy painted steel

Dimensions
435 x 355 x 155 mm

Capacity
23 litres

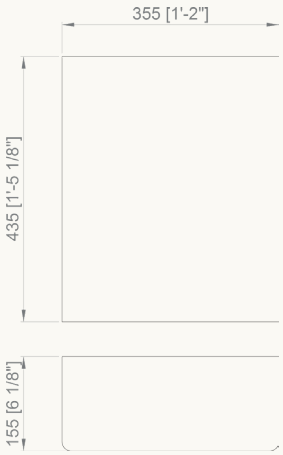



14078.S	14078.B
184,50 €	184,50 €

14078.W
120,50 €

Wall mounted bin with cover

Material
AISI 304 stainless steed.
White version epoxy painted steel

Dimensions
496 x 367 x 160 mm

Capacity
23 litres

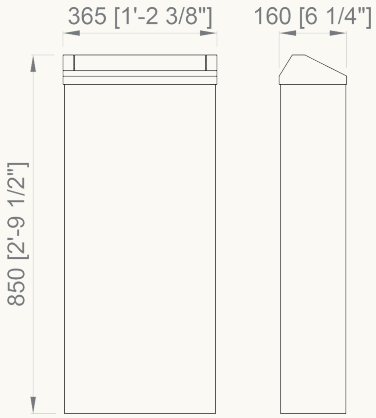



14079.S	14079.B
194,50 €	194,50 €

14079.W
130,50 €

Wall mounted bin with cover and pin tumbler lock

Material
AISI 304 stainless steed.
White version epoxy painted steel

Dimensions
496 x 367 x 160 mm

Capacity
23 litres

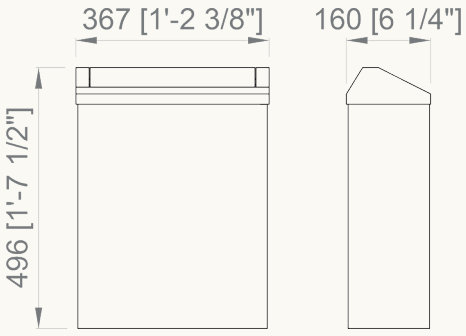

Additional technical information on www.nofer.com

paper bins

Finish
SATIN (.S)
POLISH (.B)

WALL MOUNTED BIN

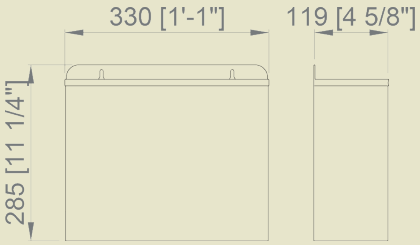

Dimensions
285 x 330 x 120 mm

Capacity
11 litres

14098.2.W	14098.2.S
38,10 €	**67,00 €**
Material: Painted steel (see color chart)	Material: Stainless steel
	Finish: POLISH



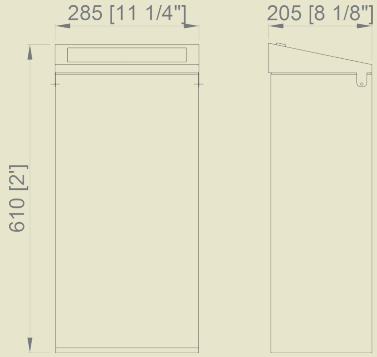

14188.2.S
235,25 €

Wall mounted bin with cover and pin tumbler lock

Material	Finish
Stainless steel	SATIN
Dimensions	Capacity
610 x 285 x 205 mm	35 litres



BINS WITH ASHTRAY

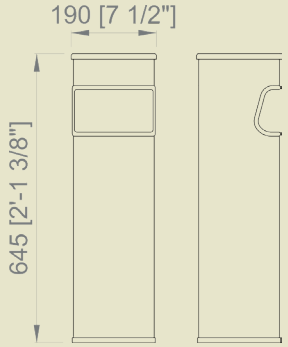

Dimensions
660 x 190 x 190 mm

Capacity
24 litres

14124.2.W	14124.2.S
82,10 €	**160,50 €**
Material: Painted steel (see color chart)	Material: Stainless steel



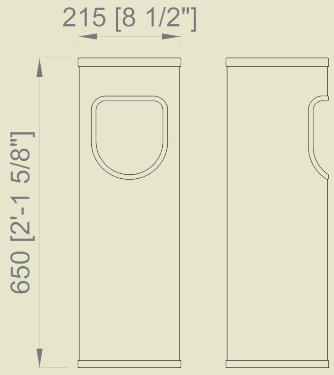

Dimensions
600 mm. Ø 210 mm

Capacity
15 litres

14122.2.W	14122.2.S
82,80 €	**142,50 €**
Material: Painted steel (see color chart)	Material: Stainless steel



White · Beige · Red · Bordeaux · Blue · Dark green · Green · Grey · Rust · Black

paper bins

PLASTIC CONTAINERS

Finish
SATIN (.S)
POLISH (.B)



14025.W
31,00 €

With pedal

Material
White ABS

Dimensions
280 x 260 x 190 mm

Capacity
8 litres

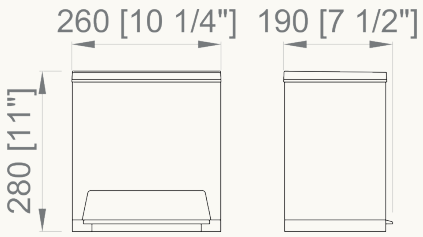



14026.W
27,90 €

With pedal

Material
White ABS

Dimensions
410 x 335 x 250 mm

Capacity
23 litres

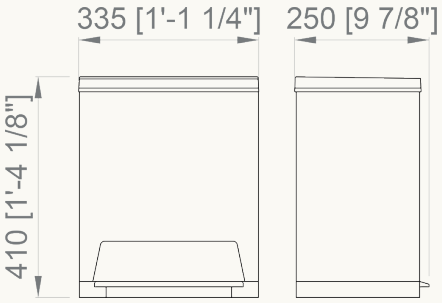

NEW



14018.W
34,60 €

With pedal

Material
Polypropylene
White body with cover: white, blue, green or yellow

Dimensions
420 x 270 x 393 mm

Capacity
25 litres

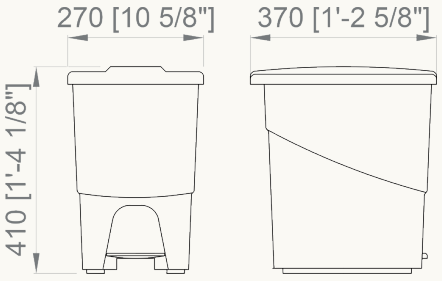

NEW



14023.W
49,90 €

Tip open bin

Material
White polypropylene

Dimensions
680 mm, Ø 375 mm

Capacity
45 litres



Additional technical information on www.nofer.com

paper bins

Finish
SATIN (.S)
POLISH (.B)

PLASTIC CONTAINERS

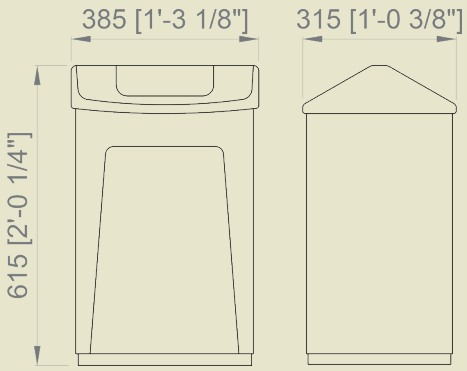

14027.W

52,30 €

Tip open bin

Material
ABS

Dimensions
615 x 385 x 315 mm

Capacity
55 litres



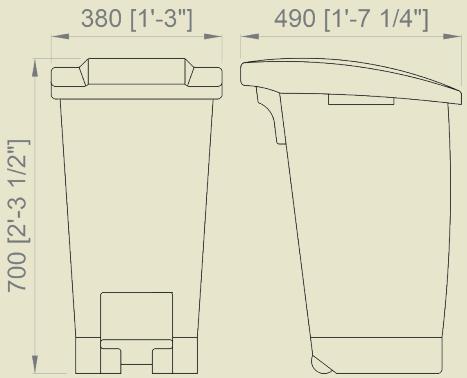

14019.W

110,00 €

With pedal

Material
Polypropylene
White body with white cover
Grey body with cover: blue, green or yellow

Dimensions
700 x 380 x 490 mm

Capacity
60 litres



NEW

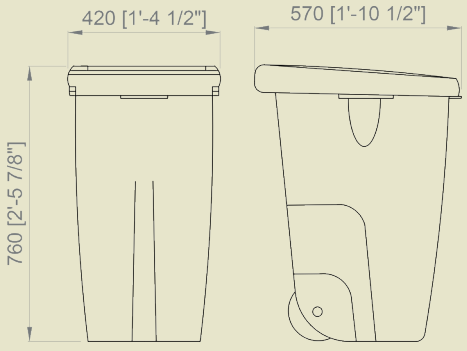

14021.W

76,60 €

With handle, closing clip and wheels

Material
Polypropylene
Grey body with cover: blue, green or yellow

Dimensions
760 x 570 x 420 mm

Capacity
85 litres



NEW

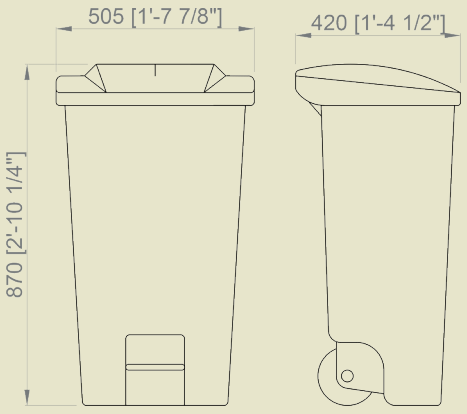

14020.W

145,00 €

With pedal, handle and wheels

Material
Polyethylene
White body with white cover. Grey body with cover: blue, green or yellow.

Dimensions
875 x 425 x 510 mm

Capacity
120 litres



NEW

paper bins

NEW

Material
AISI 304 stainless steel

Finish
SATIN (.S)

EMBEDDED WASTE PAPER BINS



14103.S

407,00 €

Embedded waste paper bin

Dimensions
850 x 366 x 158 mm

Capacity
21 litres

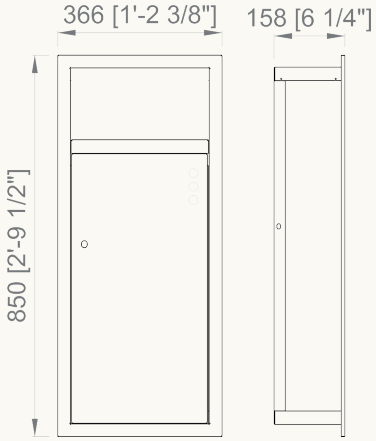



14106.P.S

427,00 €

Embedded waste paper bin

Dimensions
715 x 360 x 114 mm

Capacity
12 litres

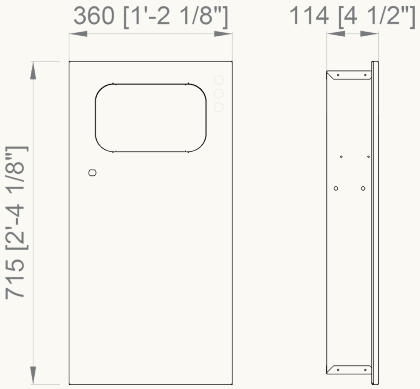



14104.P.S

445,00 €

Embedded waste paper bin

Dimensions
846 x 440 x 200 mm

Capacity
38 litres

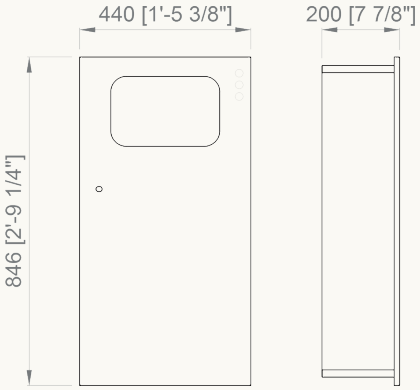

paper bins

NEW

Material
AISI 304 stainless steel

Finish
SATIN (.S)

HALF-EMBEDDED WASTE PAPER BINS

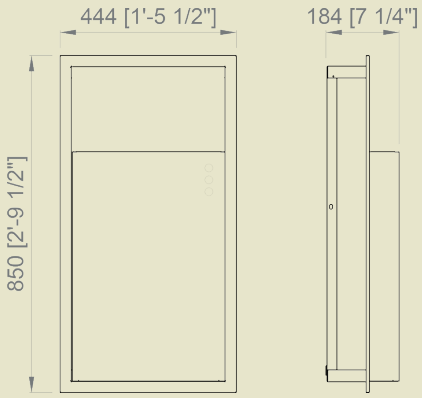

14102.S

338,00 €

Half-embedded wall waste peper bin

Dimensions
850 x 444 x 184 mm

Capacity
38 litres



WASTE PAPER BINS ATTACHED TO WALL

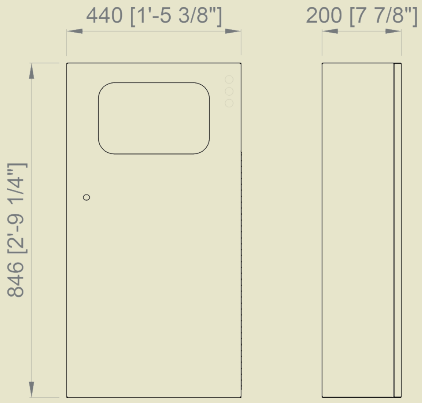

14105.S

426,00 €

Waste paper bin attached to wall

Dimensions
846 x 440 x 200 mm

Capacity
35 litres



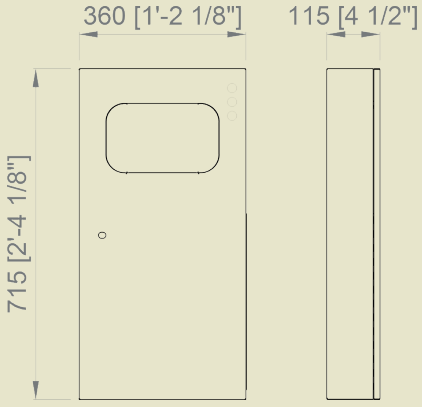

14107.S

546,00 €

Waste paper bin attached to wall

Dimensions
715 x 360 x 115 mm

Capacity
13 litres



paper bins

Finish
SATIN (.S)

HYGIENIC

NEW



09002.S

83,30 €

Material
Stainless steel

Dimensions
190 x 255 x 100 mm

Capacity
5 litres

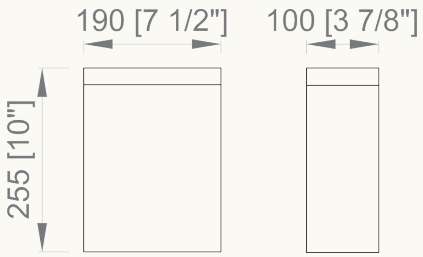



09004.S

65,60 €

Wall mounted tip-open hygienic bin

Material
AISI 304 stainless steel

Dimensions
285 x 224 x 98 mm

Capacity
5,7 litres

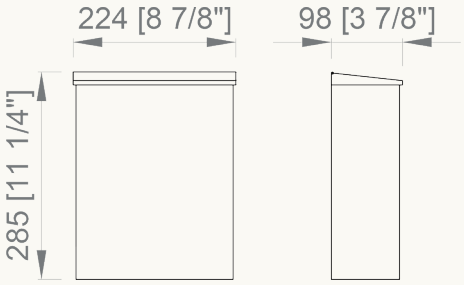



09007.2.W

49,50 €

Hygienic container with pedal and pivoting cover which prevents vision of content

Material
POLYPROPYLENE and ABS

Dimensions
360 x 180 x 570 mm

Capacity
20 litres

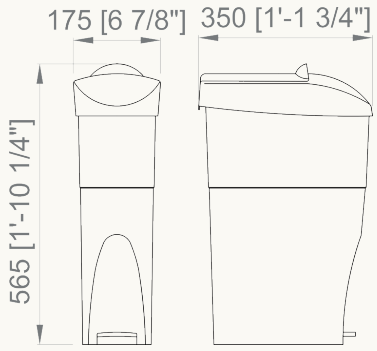

NEW



14022.W

24,10 €

Wih pedal and interior bin

Material
Polypropylene
White body and blue bin

Dimensions
285 x 280 x 230 mm

Capacity
8 litres

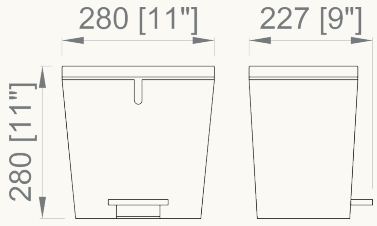

Additional technical information on www.nofer.com

paper bins

Finish
SATIN (.S)
POLISH (.B)

TOP RINGS

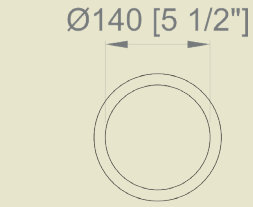

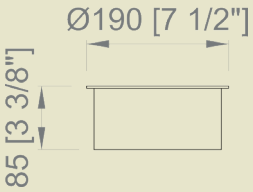

09008.S

62,60 €

Trim ring with lid for waste paper bin hole in countertop

Material
Stainless steel

NEW



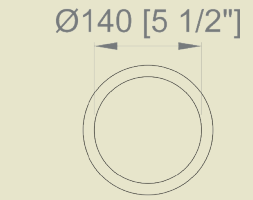

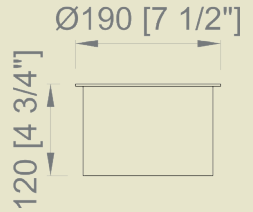

09009.S

31,90 €

Trim ring for waste paper bin hole in countertop

Material
Stainless steel

NEW



ASHTRAYS AND ANTI-FLAME BINS

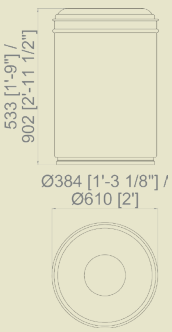

Flame retardant waste paper bin

Material
Grey painted steel

EJ0026612G

361,50 €

Dimensions
533 mm, Ø 384 mm

Capacity
45 litres

EJ0026655G

521,00 €

Dimensions
902 mm, Ø 610 mm

Capacity
200 litres





EJ00268501

279,00 €

EJ00268502

279,00 €

EJ00268503

279,00 €

Outdoor cigarrette butts container. Steel inner bucket included

Material
Polyethylene

Dimensions
965 mm, Ø 305 mm



COAT RACKS

Material
Powder coated steel

Color
Silver grey



14178.P

128,25 €

Coat rack with 8 chrome plated hangers and metal stand

Dimensions
1780 height, Ø 300 mm

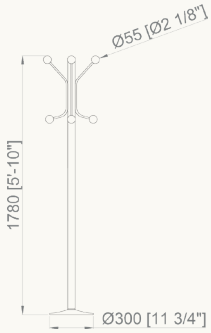



14184.P

138,00 €

Coat rack with 8 chrome plated hangers and metal stand. Detachable in two parts

Dimensions
1780 height, Ø 300 mm

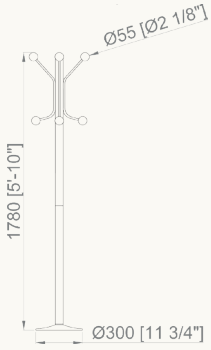



14176.P

169,00 €

Metal coat rack umbrella with eight black hangers. Detachable in two parts. Silver-grey

Dimensions
1770 height, Ø 300 mm

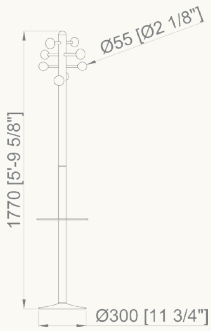

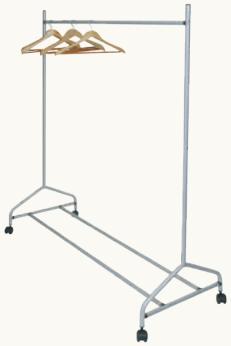

18205.B

292,50 €

Portable coat rack of steel tube. Capacity for up to 40 hangers. Four wheels

Dimensions
1710 x 1480 x 580 mm

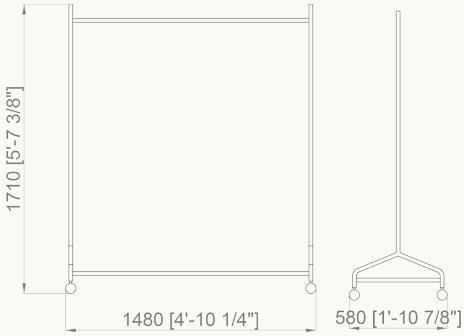



18206.B

391,00 €

Portable coat rack of steel tuve with top shelf. Capacity for up to 40 perches. Four wheels

Dimensions
1710 x 1480 x 580 mm

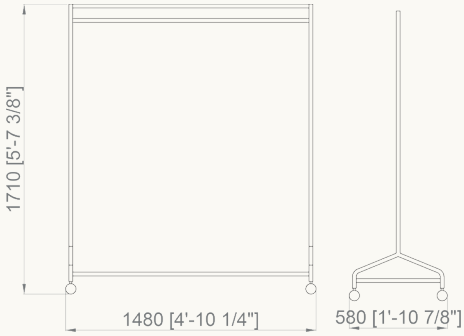

Material
Powder coated steel

COAT RACKS



14173.N

126,10 €

Coat rack stand with six ABS hangers. Black colour

Dimensions
1700 height, Ø 300 mm





14173.P

132,00 €

Coat rack stand with six ABS hangers. Grey colour

Dimensions
1700 height, Ø 300 mm



LUGGAGE RACKS

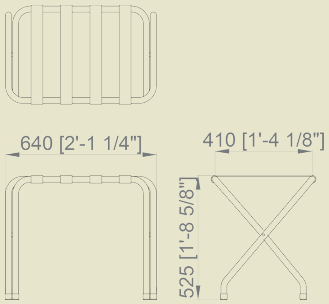

18115.B

67,30 €

Luggage rack

Material
Chrome-plated steel and nylon strips

Dimensions
525 x 640 x 410 mm



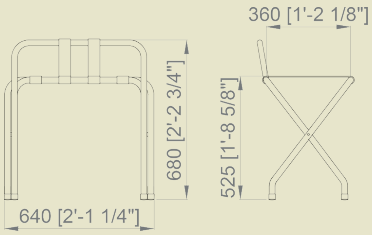

18116.B

75,00 €

Luggage rack with backtrim

Material
Chrome-plated steel and nylon strips

Dimensions
680 x 640 x 410 mm



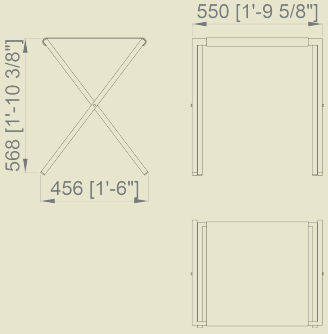

18117.B

177,50 €

Luggage rack

Material
Chrome-plated steel and leather

Dimensions
568 x 550 x 456 mm



& TECHNIC SUPPORT - BARRES D'APPUI ET AIDE TECHNIQUE - BARRE D'APPOGGIO E AIUTI TECNICI - BARRAS DE APOIO E AJUDAS TÉCNICAS DE MANOS - **BARRAS & AYUDAS TÉCNICAS** - GRAB BARS & TECHNIC SUPPORT - BARRES D'APPUI ET AIDE TECHNIQUE - BARRE D'APPOGGIO E AIUTI TECNICI - BARRAS DE APOIO E AJUDAS TÉCNICAS DE MANOS - BARRAS & AYUDAS TÉCNICAS - **GRAB BARS & TECHNIC SUPPORT** - BARRES D'APPUI ET AIDE TECHNIQUE - BARRE D'APPOGGIO E AIUTI TECNICI - BARRAS DE APOIO E AJUDAS TÉCNICAS DE MANOS - BARRAS & AYUDAS TÉCNICAS - GRAB BARS & TECHNIC SUPPORT - **BARRES D'APPUI ET AIDE TECHNIQUE** - BARRE D'APPOGGIO E AIUTI TECNICI - BARRAS DE APOIO E AJUDAS TÉCNICAS DE MANOS - BARRAS & AYUDAS TÉCNICAS - GRAB BARS & TECHNIC SUPPORT - BARRES D'APPUI ET AIDE TECHNIQUE - **BARRE D'APPOGGIO E AIUTI TECNICI** - BARRAS DE APOIO E AJUDAS TÉCNICAS DE MANOS - BARRAS & AYUDAS TÉCNICAS - GRAB BARS & TECHNIC SUPPORT - BARRES D'APPUI ET AIDE TECHNIQUE - BARRE D'APPOGGIO E AIUTI TECNICI - **BARRAS DE APOIO E AJUDAS TÉCNICAS DE MANOS** - BARRAS & AYUDAS TÉCNICAS - GRAB BARS & TECHNIC SUPPORT - BARRES D'APPUI ET AIDE TECHNIQUE - BARRE D'APPOGGIO E AIUTI TECNICI - BARRAS DE

"After all there is just one race: humanity"

George Edward Moore





...regardless of their origin, race,
their customs, their limitations...

NOFER®

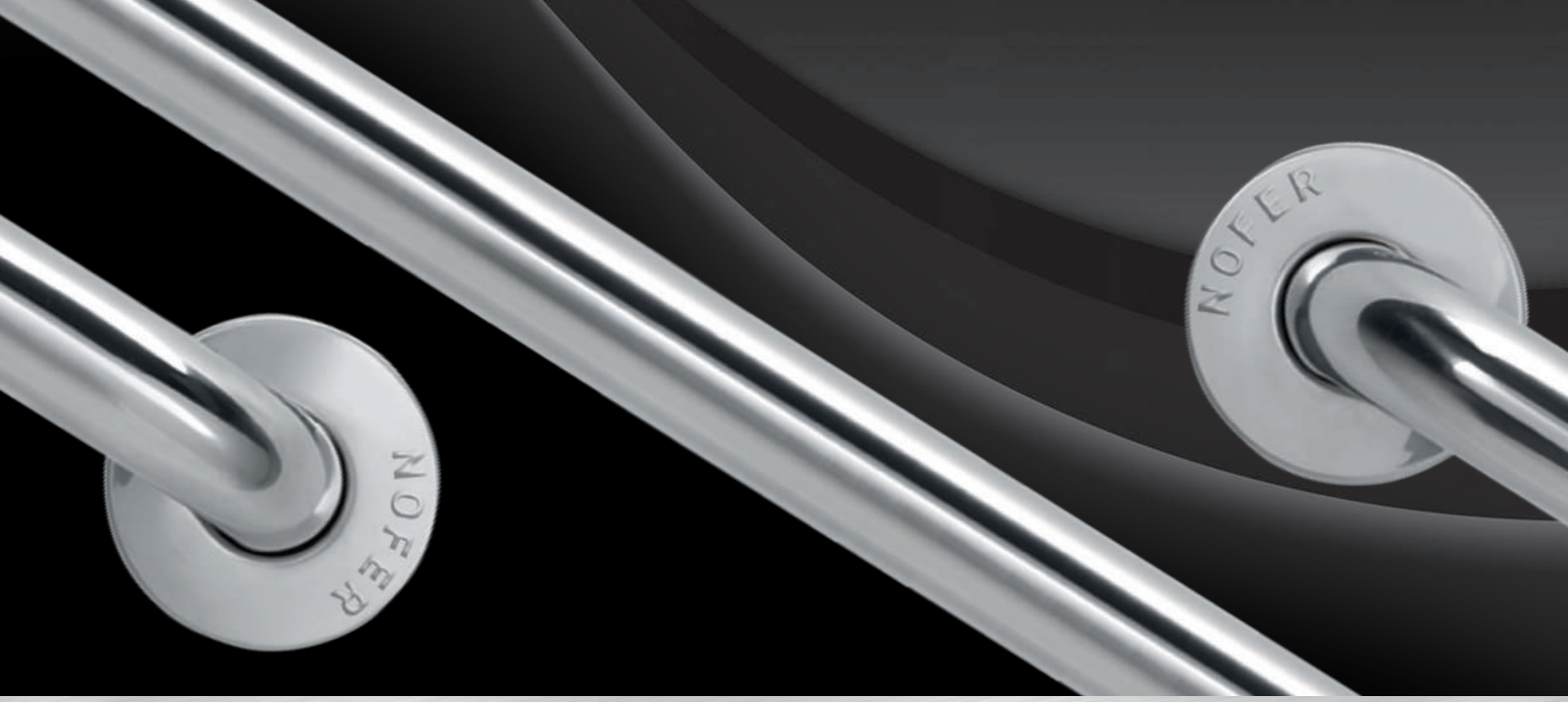

INOX SERIES

- **High resistance and durability.** Long-life and anticorrosive material.
- Grab bars and shower seats **equipped** nonconductive kit and fixing materials.
- **Full range** suitable for the use requirements of all the adapted bathroom equipment: toilet pan, wash basin, shower and bathtub.
- NOFER manufactures all type of grab bars and technical aids of AISI 304 Stainless steel in different finishings. **We have all the means to manufacture** custom made grab bars.
- We have, on request, AISI 316 Stainless steel grab bars **suitable for all type of environments** aggressive ambient conditions.



inox straight

Straight bars with two points of support.
Anti-conductive kit and bolts included

Material
AISI 304 stainless steel for finishes .S, .B and .W
White epoxy painted steel for finish .F

Finish
POLISH (.B), SATIN (.S), WHITE (.W),

Grab bar Ø
32 mm

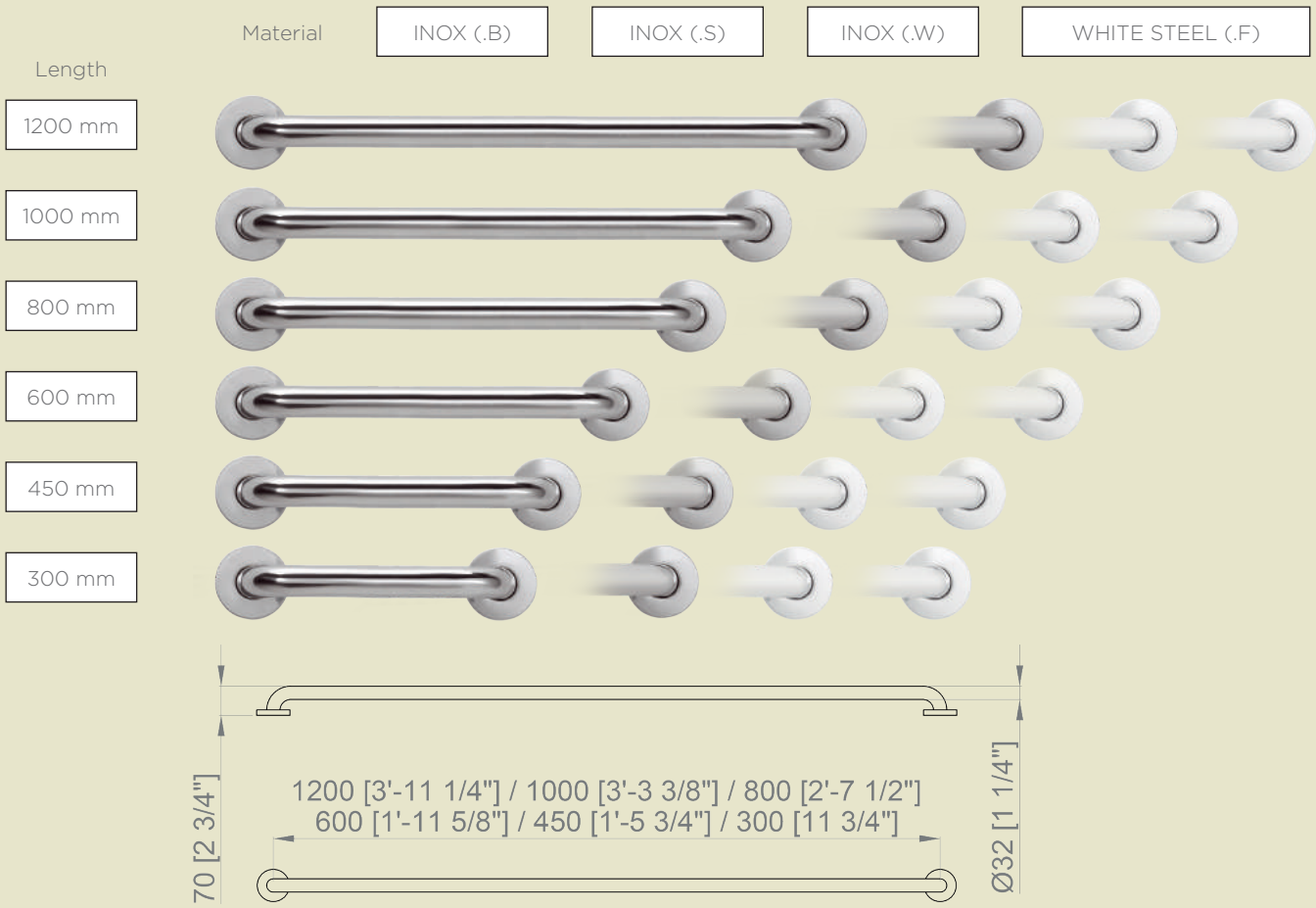

Dimensions Length 1200 mm	15054.120.S **103,00 €**	15054.120.B **116,00 €**	Dimensions Length 1000 mm	15054.100.S **96,80 €**	15054.100.B **109,50 €**
	15054.120.W **104,50 €**			15054.100.W **97,50 €**	
Dimensions Length 800 mm	15054.80.S **46,20 €**	15054.80.B **50,40 €**	Dimensions Length 600 mm	15054.60.S **39,60 €**	15054.60.B **43,70 €**
	15054.80.W **47,80 €**	15054.80.F **32,20 €**		15054.60.W **45,90 €**	15054.60.F **31,20 €**
Dimensions Length 450 mm	15054.45.S **34,80 €**	15054.45.B **38,30 €**	Dimensions Length 300 mm	15054.30.S **31,20 €**	15054.30.B **35,40 €**
	15054.45.W **39,60 €**	15054.45.F **27,45 €**		15054.30.W **35,10 €**	15054.30.F **24,75 €**

GRAB BARS

inox foldable

Material
Stainless steel
AISI 304 for finishes .S, .B and .W
White epoxy painted steel for finish .F

Finish
SATIN (.S)
POLISH (.B)
WHITE (.W)
WHITE (.F)

Bar diameter
32 mm

Anti-conductive kit and bolts included

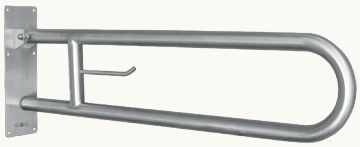

15051.80.S	15051.80.B
129,00 €	140,50 €
15051.80.W	15051.80.F
126,50 €	90,60 €

With toilet paper roll holder

Dimensions
Length 800 mm

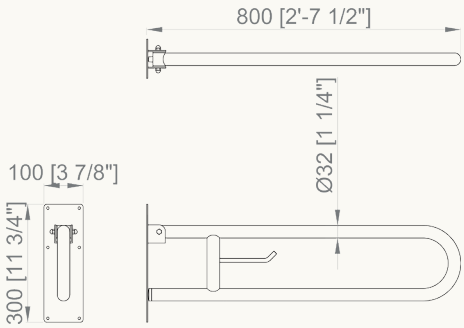

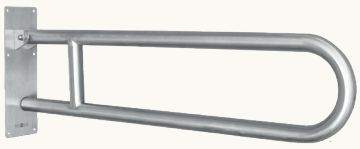

15051.SP.80.S	15051.SP.80.B
128,00 €	146,00 €
15051.SP.80.W	
126,50 €	

Without toilet paper roll holder

Dimensions
Length 800 mm

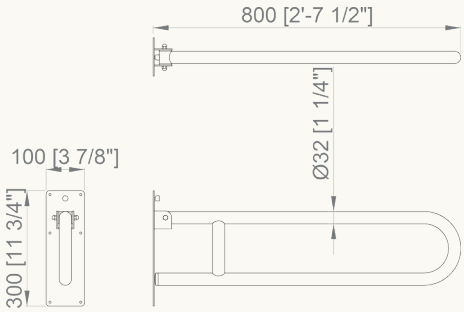

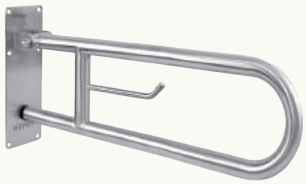

15051.60.S	15051.60.B
124,00 €	135,00 €
15051.60.W	15051.60.F
122,00 €	84,20 €

With toilet paper roll holder

Dimensions
Length 600 mm

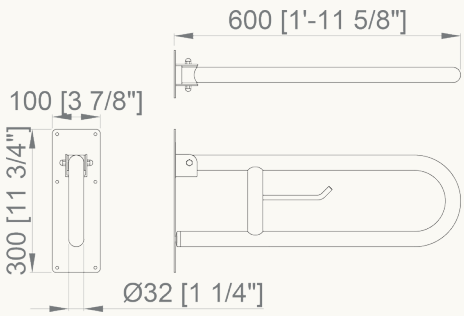

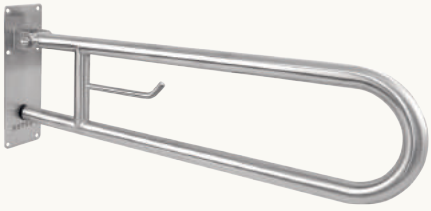

15051.85.S	15051.85.B
143,00 €	153,50 €
15051.85.W	
143,00 €	

With toilet paper roll holder

Dimensions
Length 850 mm

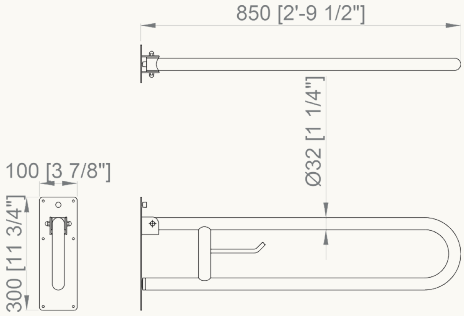

Additional technical information on www.nofer.com

GRAB BARS

inox foldable

Material
Stainless steel
AISI 304 for finishes .S, .B and .W
White epoxy painted steel for finish .F

Bar diameter
32 mm

Finish
SATIN (.S)
POLISH (.B)
WHITE (.W)
WHITE (.F)

Anti-conductive kit and bolts included



15053.S	15053.B
397,00 €	397,00 €

15053.W
397,00 €

Set of fixings for hotels.

Suitable for 15051.80, 15051.60, 15051.85, 15206



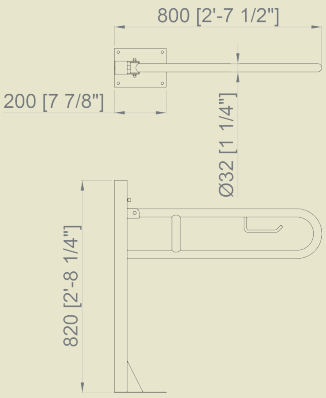

15064.S	15064.B
234,00 €	249,50 €

15064.W
249,50 €

With anchor to flooring and toilet paper roll holder

Dimensions
820 x 800 x 200 mm



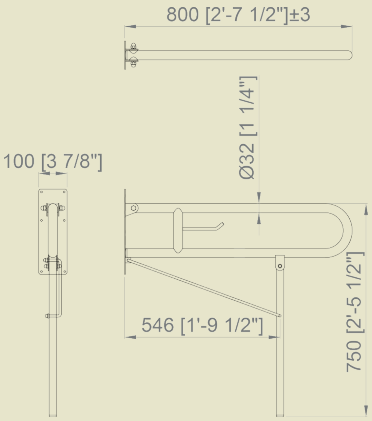

15206.S	15206.B
280,50 €	290,00 €

15206.W
290,00 €

With support leg into floor and toilet paper roll holder

Dimensions
Length 800 mm, height 750 mm

NEW



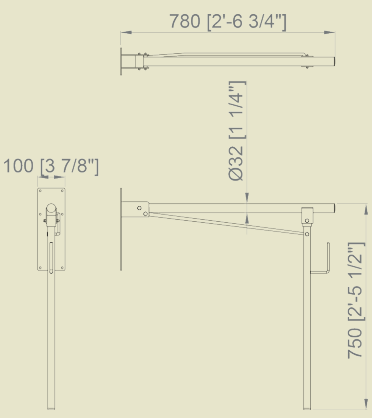

15062.S	15062.B
168,00 €	200,00 €

15062.W
138,00 €

With support leg into floor and toilet paper roll holder

Dimensions
750 x 100 x 780 mm



GRAB BARS

inox support

TRIPLE WALL SUPPORT

Material
AISI 304 stainless steel

Finish
SATIN (.S)
POLISH (.B)
WHITE (.W)

Bar diameter
32 mm

Anti-conductive kit
and bolts included

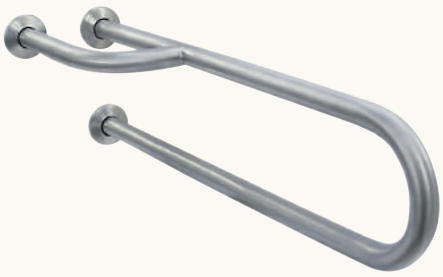

15047.S	15047.B
152,50 €	158,00 €

15047.W
182,50 €

Dimensions
Length 600 mm

Position

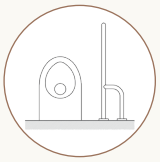

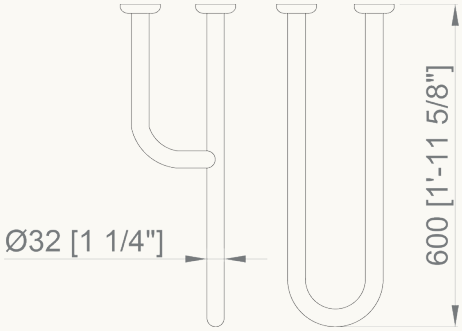



15048.S	15048.B
152,50 €	158,00 €

15048.W
182,50 €

Dimensions
Length 600 mm

Position

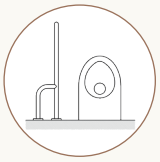

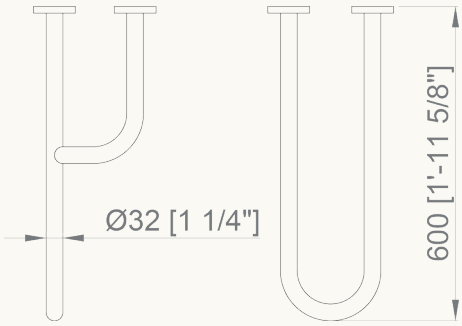

NON-CONDUCTIVE PLATES



15210.K
6,00 €

Suitable for 15051 and 15062 grab bars

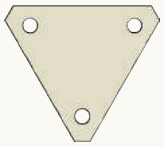

15211.K
3,30 €

Suitable for straight bars (two units needed)



15213.K
3,30 €

Suitable for 15064 bars



15220.K
3,30 €

Suitable for 15045 and 15046 shower seats.

* 15045 requires two units

* 15046 requires three units

GRAB BARS

inox support

Material
AISI 304 stainless steel

Finish
SATIN (.S)
POLISH (.B)
WHITE (.W)

Bar diameter
32 mm

Anti-conductive kit
and bolts included

WALL-FLOOR SUPPORT

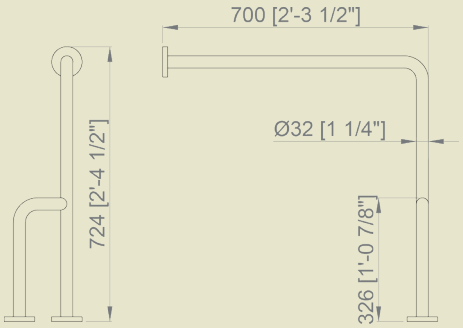

15203.S	15203.B
176,50 €	**191,50 €**

15203.W
180,50 €

Dimensions
700 x 700 mm

Position





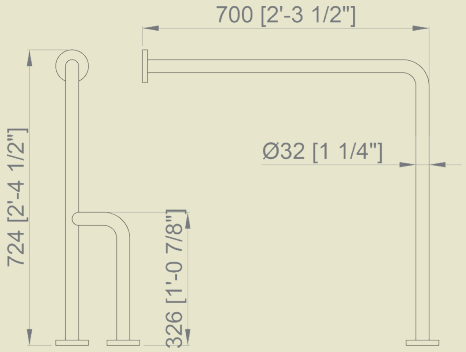

15204.S	15204.B
176,50 €	**197,50 €**

15204.W
180,50 €

Dimensions
700 x 700 mm

Position





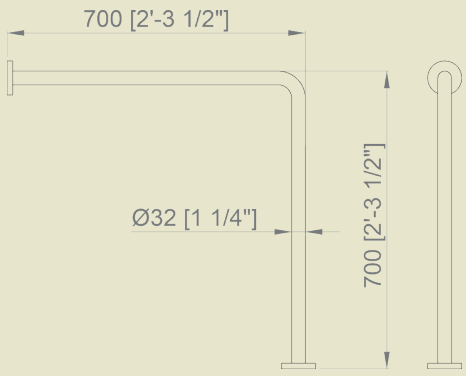

15198.S	15198.B
103,00 €	**134,00 €**

15198.W
111,00 €

Dimensions
700 x 700 mm



GRAB BARS

inox angular

Material
Stainless steel
AISI 304

Bar diameter
32 mm

Finish
SATIN (.S)
POLISH (.B)
WHITE (.W)

Anti-conductive kit
and bolts included



15158.S	15158.B
116,50 €	120,00 €

15158.W
180,50 €

Dimensions
Vertical arm: 700 mm.
Horizontal arm: 400 mm

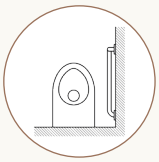

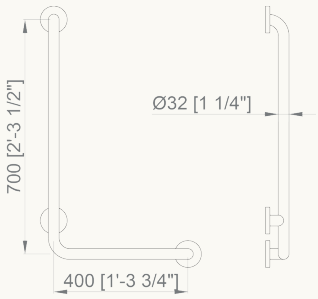



15159.S	15159.B
116,50 €	120,00 €

15159.W
180,50 €

Dimensions
Vertical arm: 700 mm.
Horizontal arm: 400 mm

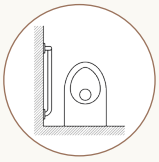

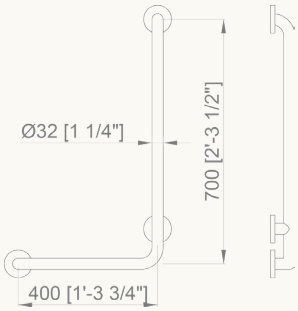



15060.S	15060.B
119,50 €	128,50 €

15060.W
121,00 €

Reversible position
Dimensions
600 x 600 mm

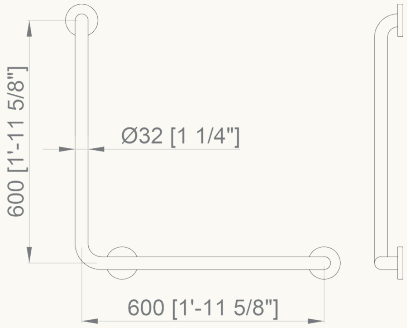

NEW



15161.S	15161.B
70,00 €	80,00 €

15161.W
55,00 €

135º angle
Dimensions
Length brazo: 400 mm



NEW



15162.S	15162.B
140,00 €	140,00 €

15162.W
110,00 €

Dimensions
750 x 780 x 100 mm

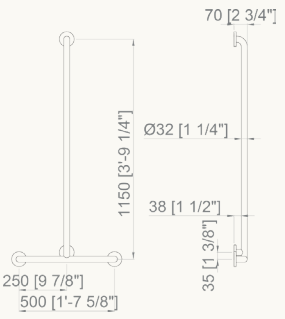

Additional technical information on www.nofer.com

GRAB BARS

inox angular

Material
Stainless steel
AISI 304

Bar diameter
32 mm

Finish
SATIN (.S)
POLISH (.B)
WHITE (.W)

Anti-conductive kit
and bolts included

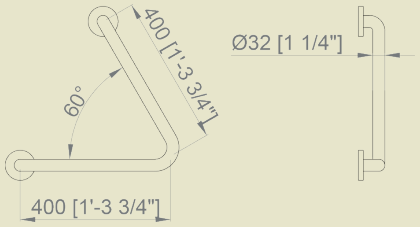

15069.S	15069.B
99,40 €	**109,00 €**

15069.W
106,00 €

60º angle

Dimensions
Arm length: 400 mm



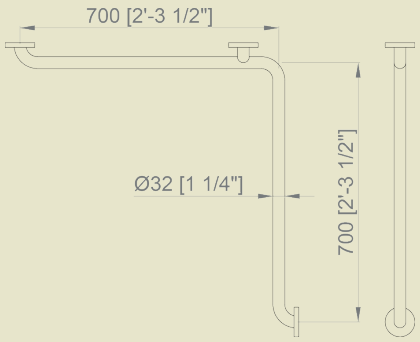

15052.S	15052.B
102,00 €	**121,50 €**

15052.W
128,00 €

90º angle

Dimensions
700 x 700 mm



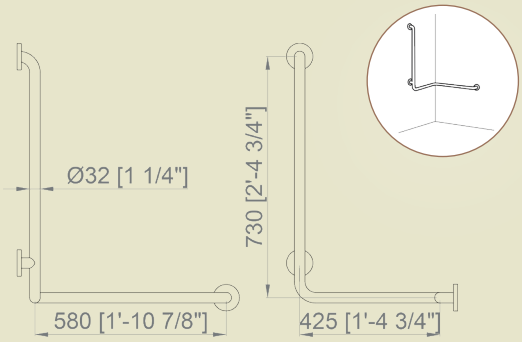

15049.S	15049.B
192,50 €	**202,00 €**

15049.W
207,00 €

Double angle bar

Dimensions
Horizontal arm: 425 x 580 mm
Vertical arm: 730 mm



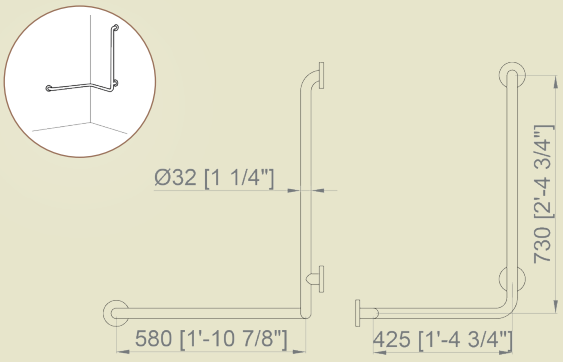

15050.S	15050.B
192,50 €	**202,00 €**

15050.W
207,00 €

Double angle bar

Dimensions
Horizontal arm: 425 x 580 mm
Vertical arm: 730 mm



Support for shower sprayer

15209.34.B	15209.32.B
33,40 €	**37,20 €**
Suitable for Ø 34 mm bar	Suitable for Ø 32 mm bar







NYLON SERIES

- **Anticorrosive aluminium** inner core with antibacterial Nylon coating.
- **Made of aluminium core** with stainless steel wall brackets and 4 mm thick nylon coating which gives the bar high resistance and durability. This is essential for the good maintenance of the external and internal parts of the grab bar
- The nylon coting is produced from powder format polymers enriched with highly effective **bactericidal additives,** during the forming process.
- **Proven bactericidal effectiveness** against the more threatening bacteria in hospitals and medical centers such as: Escherichia coli, Salmonella enteritides, Staphylococusaureus and Listeria monocytogenos.
- The bacterial reduction has led to the **99,9%** reduction within the following 24 hours, being reduced to less than the 5% at the first 2 hours.
- There is a **full range** counting with all the typologies that you may need: straight bars, angled bars, swing-up bars, reinforced, with floor supports, for shower, shower seats, handles, etc.
- **Non-conductive material:** no earth grounding means required.
- Confortable touch, **non-slip.**
- Fixing materials included.
- The bactericidal properties and the soft and warm finish make the new NOFER Nylon Series **the besto choice** the healthcare and hospital environment.

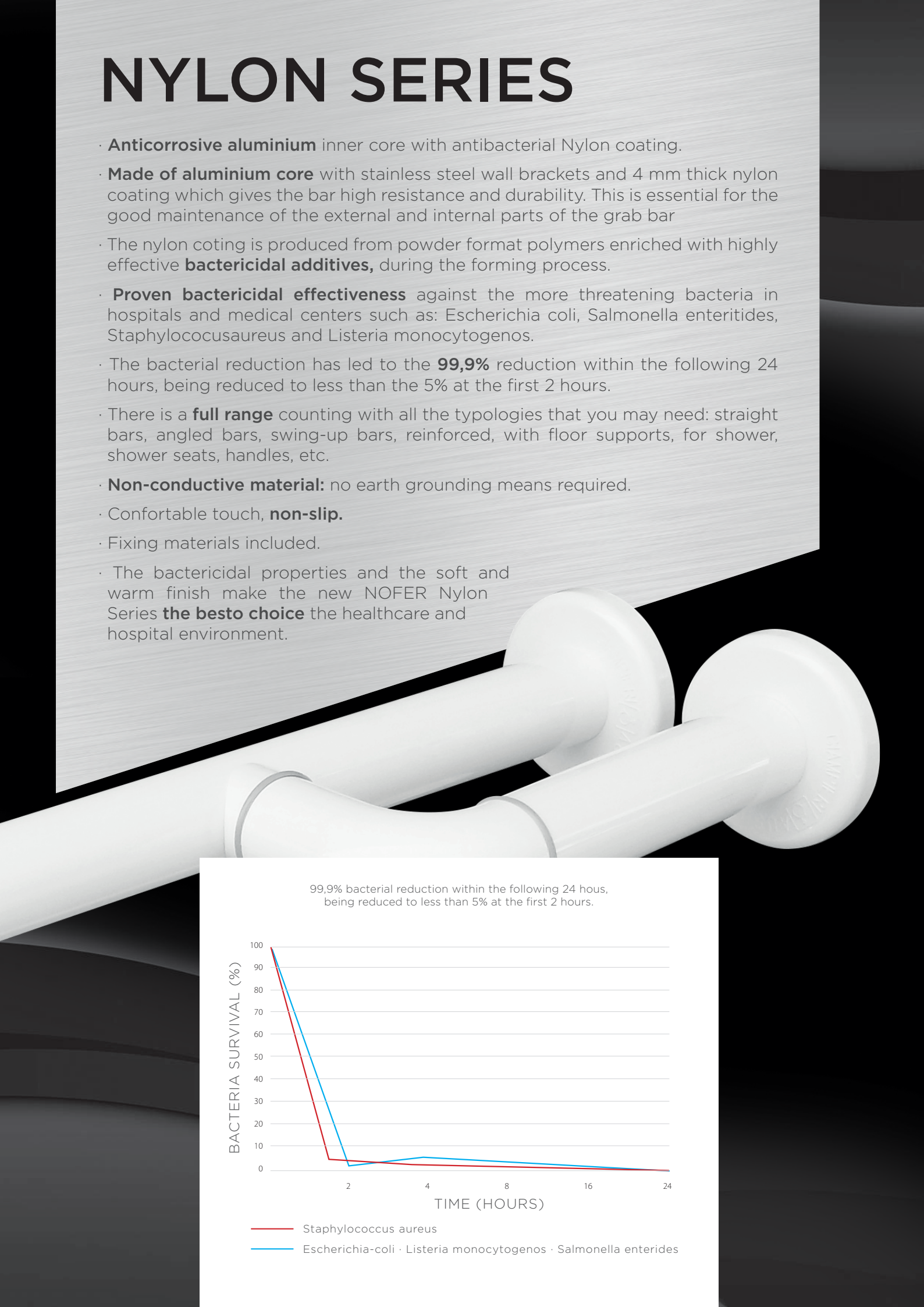

99,9% bacterial reduction within the following 24 hous, being reduced to less than 5% at the first 2 hours.

Material
Aluminum coated with polymer anti-bacteria. Brackets in AISI 304 stainless steel with NYLON trim

Finish
WHITE

Bar Ø
34 mm

nylonstraights

Straight aluminum support bars coated with polymer anti-bacteria.
Brackets in AISI 304 stainless steel with NYLON trim

STRAIGHT BARS

		Length
15054.30.NBA	44,10 €	300 mm
15054.40.NBA	48,30 €	400 mm
15054.50.NBA	54,80 €	500 mm
15054.60.NBA	58,70 €	600 mm
15054.73.NBA	68,70 €	730 mm
15054.90.NBA	99,30 €	900 mm
15054.120.NBA	114,00 €	1200 mm

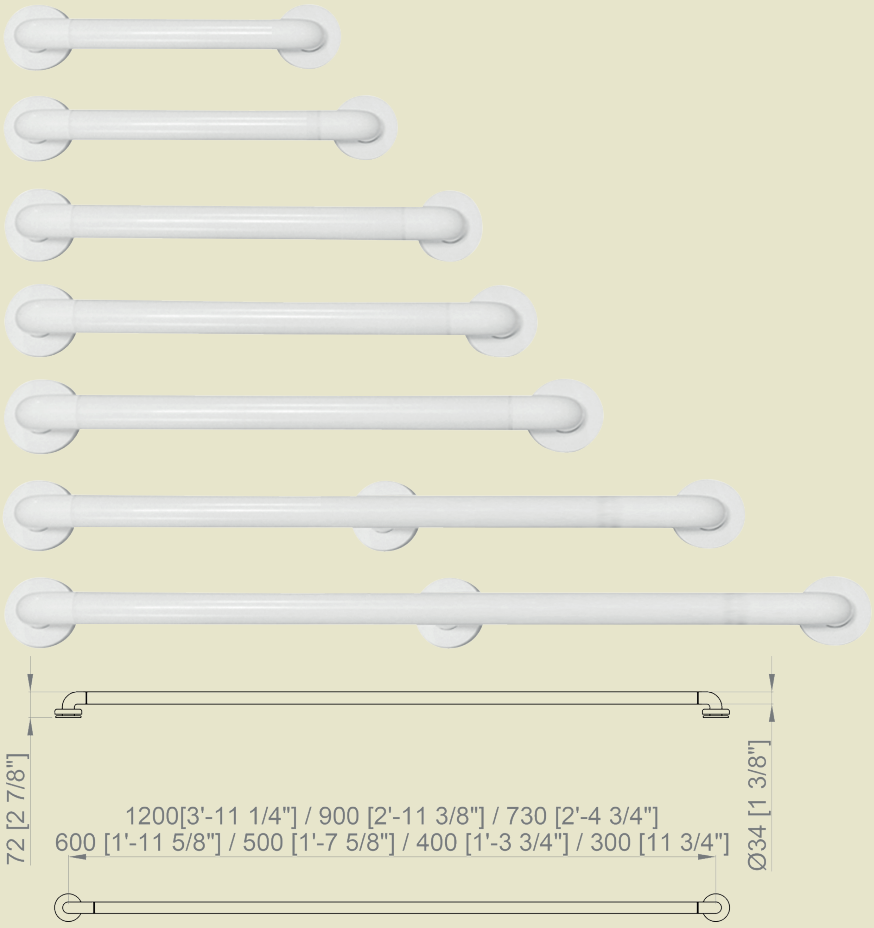

FOLDING BARS

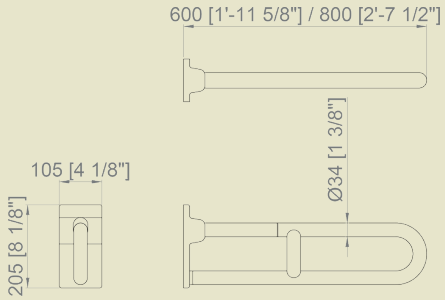

15051.60.NBA
178,00 €

Dimensions
600 mm

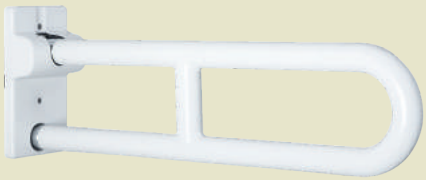

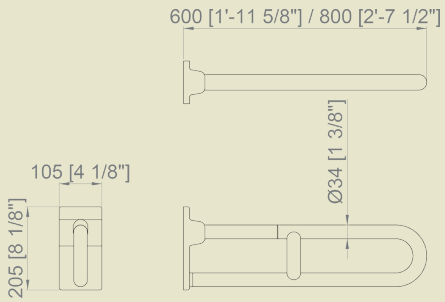

15051.80.NBA
215,00 €

Dimensions
800 mm

GRAB BARS

nylonangular

Material
Aluminum coated with polymer anti-bacteria. Brackets in AISI 304 stainless steel with NYLON trim

Finish	Bar Ø
WHITE	34 mm

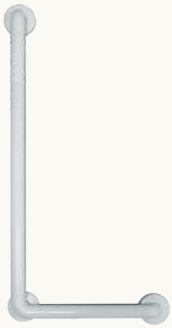

15158.NBA
115,00 €

Dimensions
700 x 400 mm

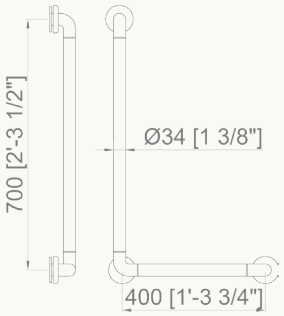

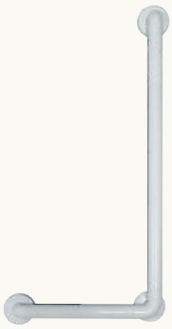

15159.NBA
115,00 €

Dimensions
700 x 400 mm

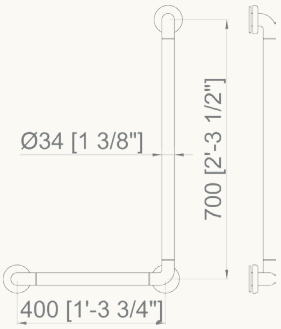



15060.NBA
129,00 €

Dimensions
600 x 600 mm

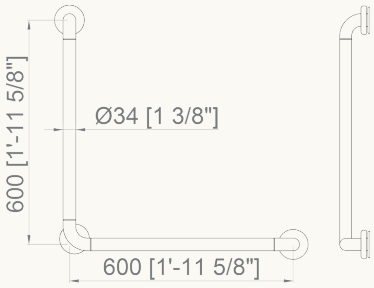

NEW



15161.NBA
70,00 €

Dimensions
Arms 400 mm

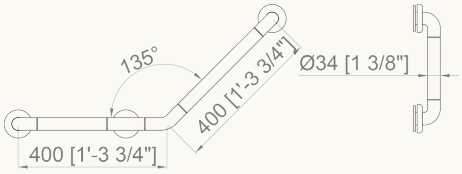

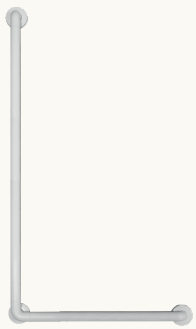

15158.120.70.NBA
176,00 €

Dimensions
1200 x 700 mm

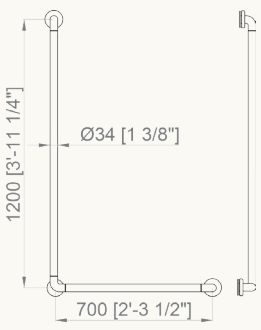

Additional technical information on www.nofer.com

GRAB BARS

nylonangular

Material
Aluminum coated with polymer anti-bacteria. Brackets in AISI 304 stainless steel with NYLON trim

Finish	Bar Ø
WHITE	34 mm

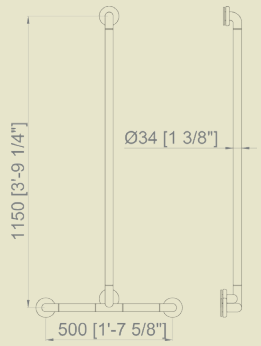

15162.NBA
140,00 €

Dimensions
1150 x 500 mm



NEW

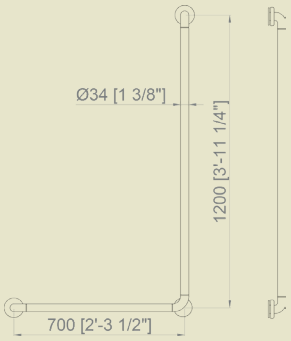

15159.120.70.NBA
176,00 €

Dimensions
1200 x 700 mm

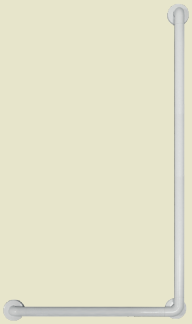

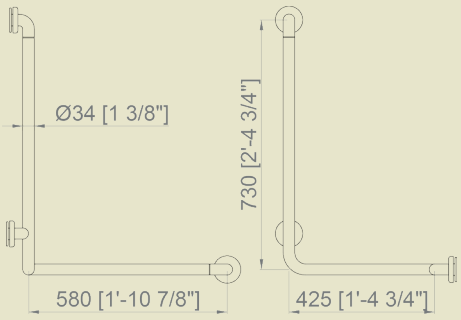

15049.NBA
157,00 €

Dimensions
730 x 580 x 425 mm

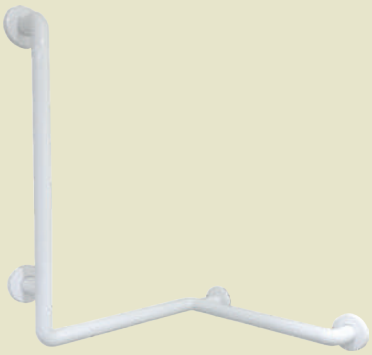

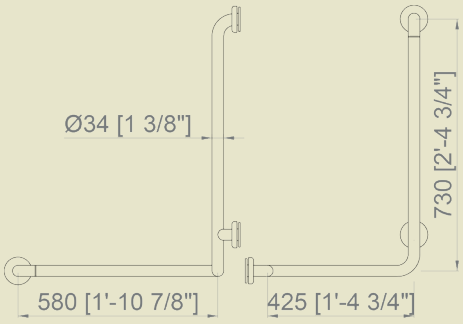

15050.NBA
157,00 €

Dimensions
730 x 425 x 580 mm

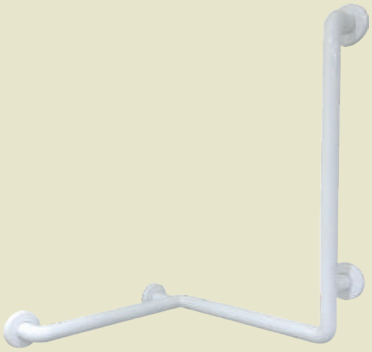

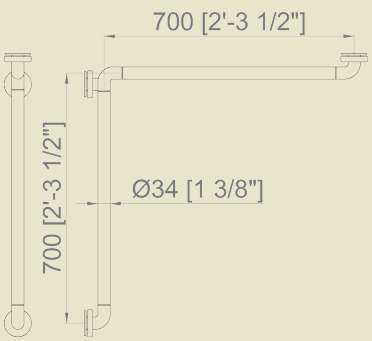

15052.NBA
109,00 €

Dimensions
700 x 700 mm

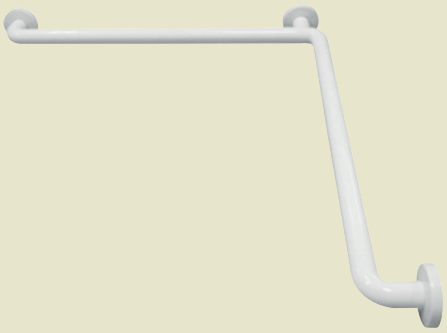

GRAB BARS

nylon

Material
Aluminum coated with polymer anti-bacteria. Brackets in AISI 304 stainless steel with NYLON trim

Finish
WHITE

Bar Ø
34 mm



NYLON support for shower sprayer

15209.34.NBA
15,50 €
Suitable for
Ø 34 mm bars

15209.32.NBA
23,00 €
Suitable for
Ø 32 mm bars



15206.NBA
321,00 €

Folding bar with support to ground. Height-adjustable leg

Dimensions
Length 800 mm

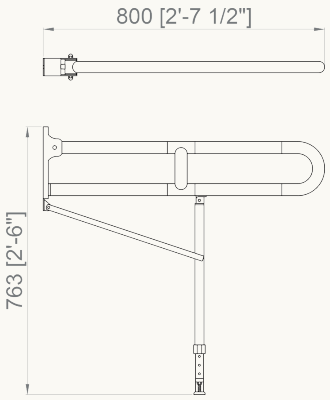



15064.NBA
438,00 €

Folding bar with anchor to floor

Total dimensions
793 x 860 x 150 mm

Support heigth
800 mm

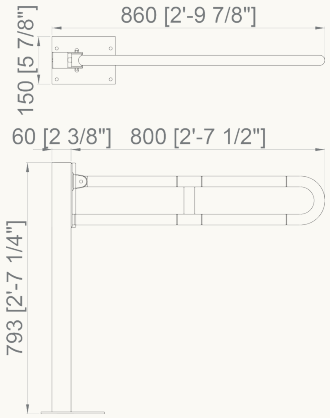



15203.NBA
189,00 €

Wall-floor bar with double support to floor. Reversible position

Dimensions
733 x 102 x 733 mm

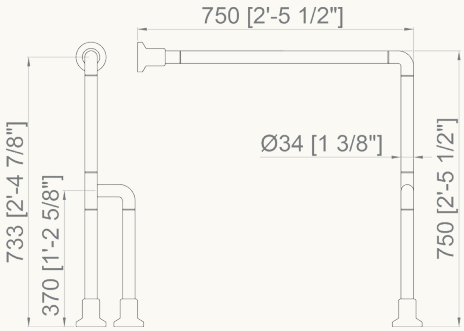

Additional technical information on www.nofer.com

GRAB BARS

nylon

Material
Aluminum coated with polymer anti-bacteria. Brackets in AISI 304 stainless steel with NYLON trim

Finish	Bar Ø
WHITE	34 mm

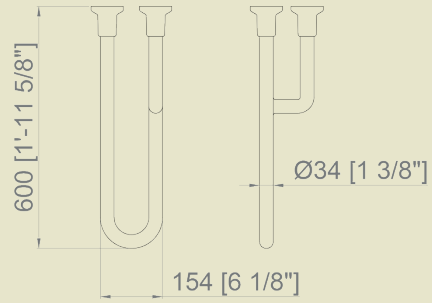

15047.60.NBA

164,00 €

With triple wall support.
Reversible position

Dimensions
Length 600 mm

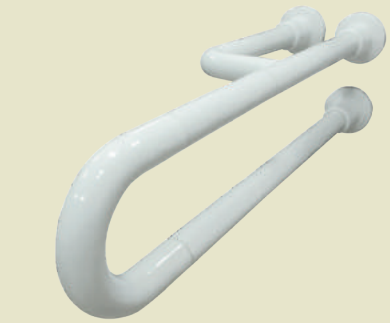

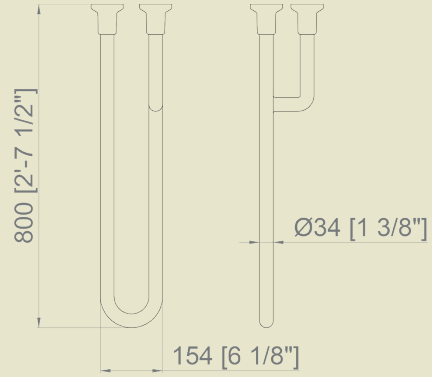

15047.80.NBA

188,00 €

With triple wall support.
Reversible position

Dimensions
Length 800 mm



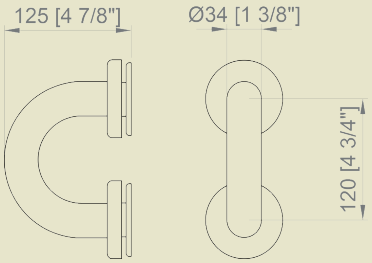

15070.NBA

58,50 €

Handle

Dimensions
Length 120 mm



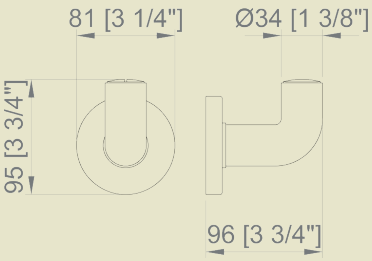

15071.NBA

22,60 €

Hook

Dimensions
95 x 81 x 96 mm



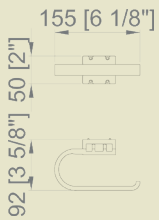

15051.NPR

14,60 €

Adaptable toilet paper holder and folding bar



GRAB BARS

nylon GIAMPIERI dal 1925 rubinetterie milano

Material
Polyamide-coated Aluminum

Finish
WHITE

Bar diameter
36 mm

STRAIGHT BARS

Straight grab bars of aluminium coated with anti-bacteria white polymer .
Supportflange of zinced steel.

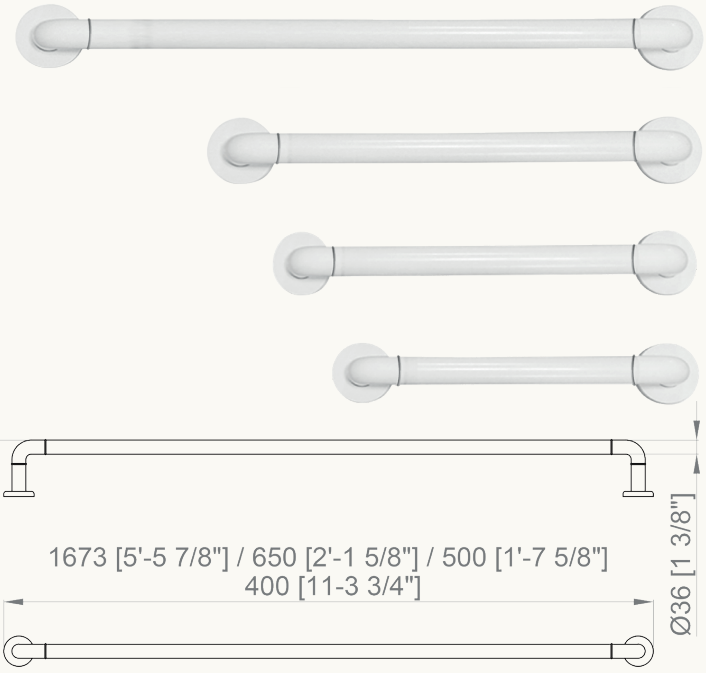

1000 mm	15054.100.N36	67,30 €
650 mm	15054.65.N36	55,70 €
500 mm	15054.50.N36	51,10 €
400 mm	15054.40.N36	46,40 €

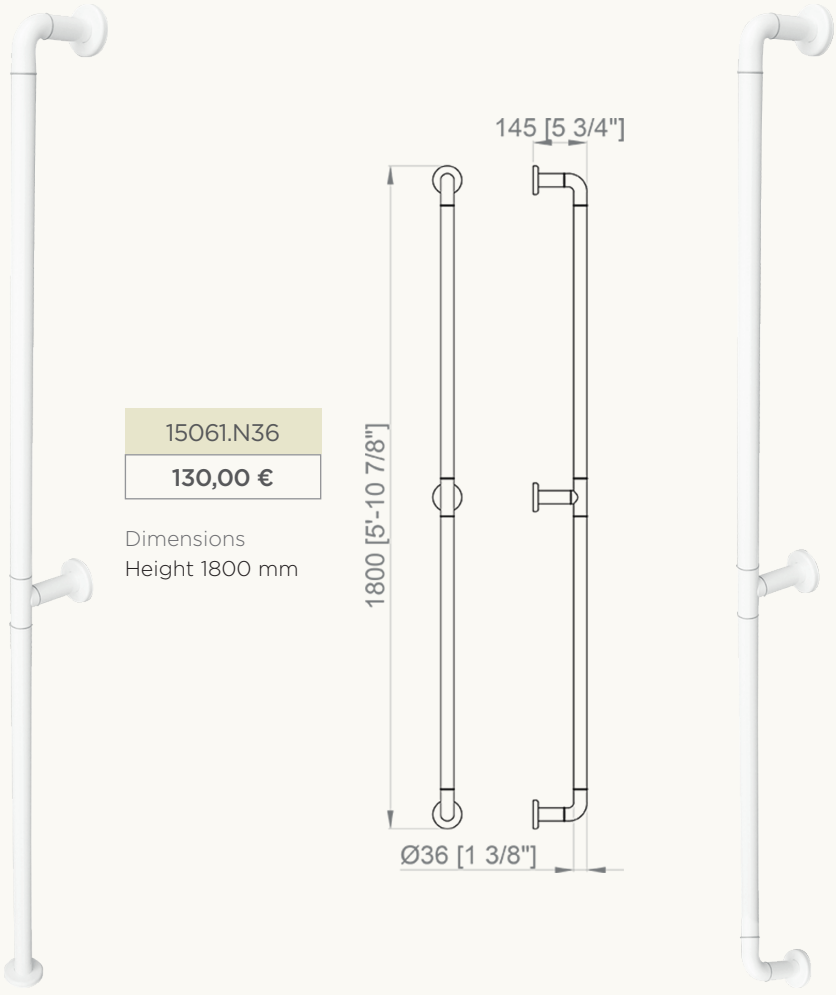

15061.N36
130,00 €

Dimensions
Height 1800 mm

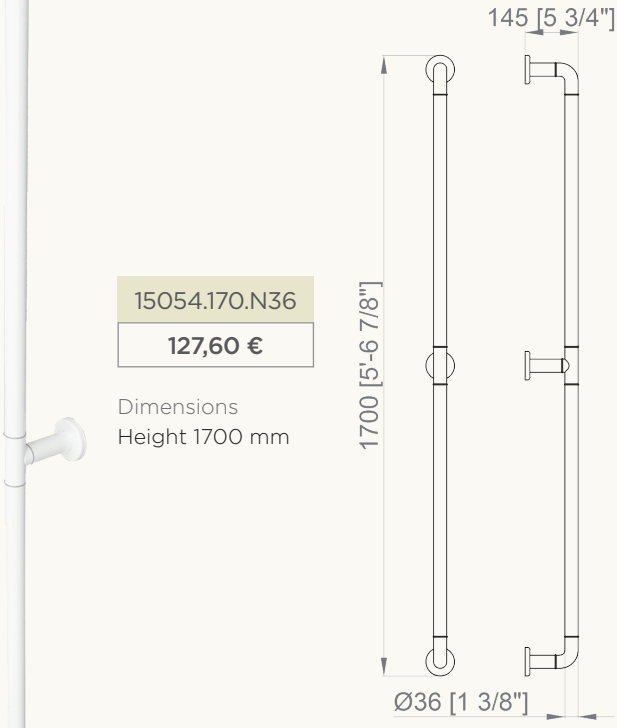

15054.170.N36
127,60 €

Dimensions
Height 1700 mm

GRAB BARS

nylon

GIAMPIERI dal 1925 rubinetterie milano

Material
Polyamide-coated Aluminum

Finish
WHITE

Bar diameter
36 mm

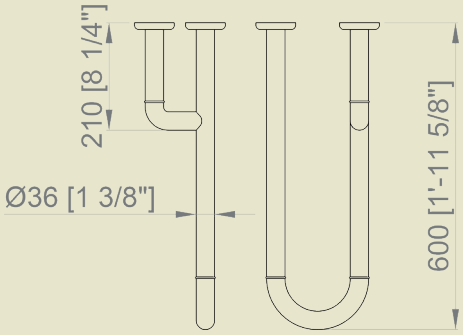

Bar with triple wall support.
Reversible position

15047.60.N36
130,00 €

Dimensions
Length 600 mm

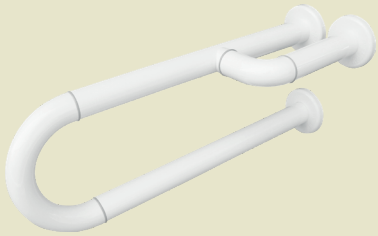

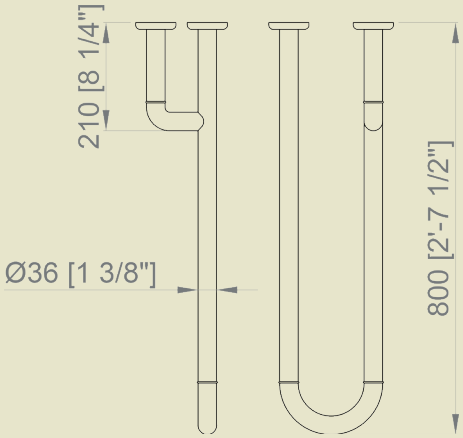

Bar with triple wall support.
Reversible position

15047.80.N36
144,00 €

Dimensions
Length 800 mm

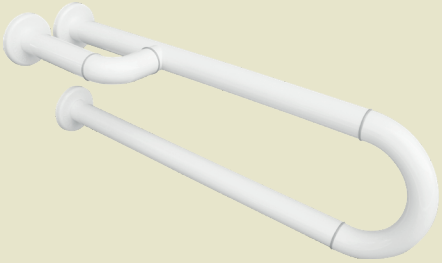

FOLDING BARS

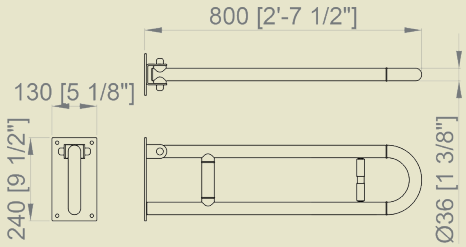

15051.80.N36
211,50 €

White polymer coated aluminum folding support bar. Wall flange to support of galvanized steel

Dimensions
240 x 800 x 130 mm

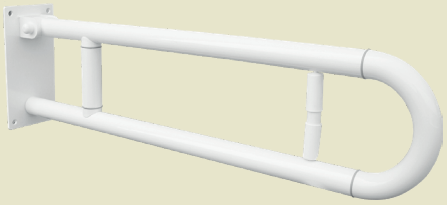

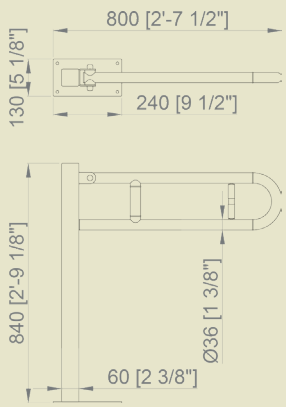

15064.N36
283,50 €

Folding support bar with support to floor

Total dimensions
793 x 150 x 860 mm

Support height
750 mm

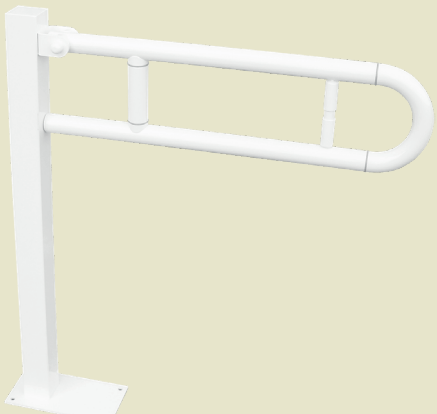

GRAB BARS

nylon

GIAMPIERI dal 1925 rubinetterie milano

ANGULAR BARS

Material
Polyamide-coated Aluminum

Finish
WHITE

Bar diameter
36 mm

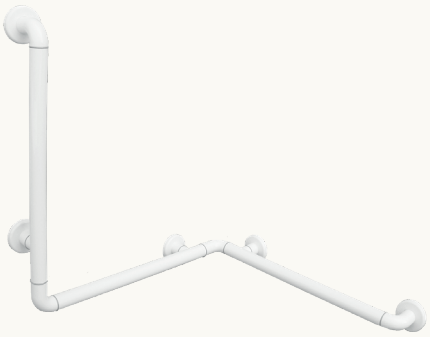

15049.N36

158,00 €

Dimensions
800 x 700 x 700 mm

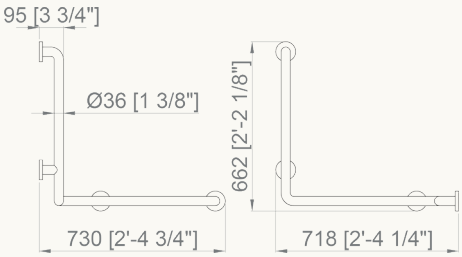

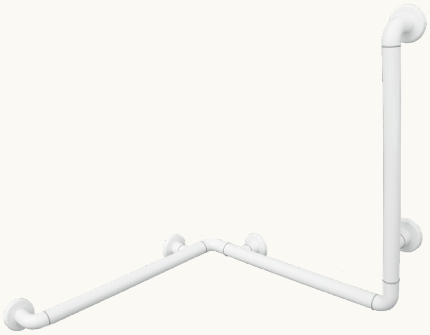

15050.N36

158,00 €

Dimensions
800 x 700 x 700 mm

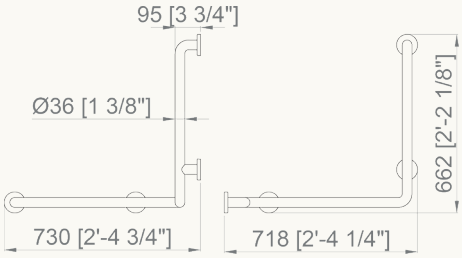

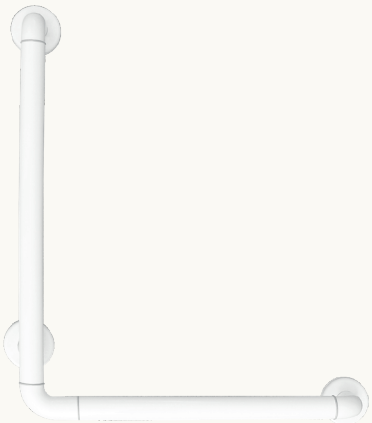

15158.N36

107,00 €

Dimensions
700 x 400 mm

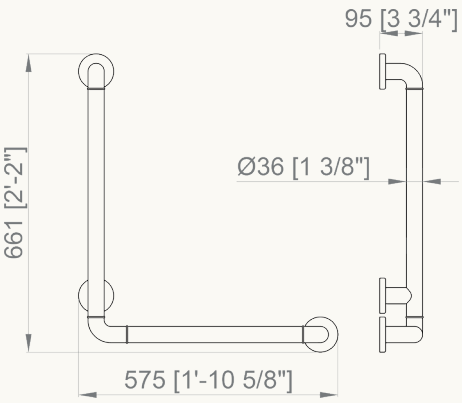

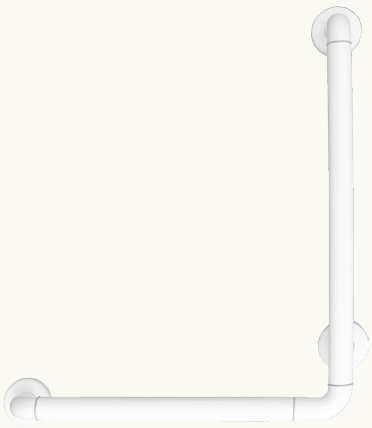

15159.N36

107,00 €

Dimensions
700 x 400 mm

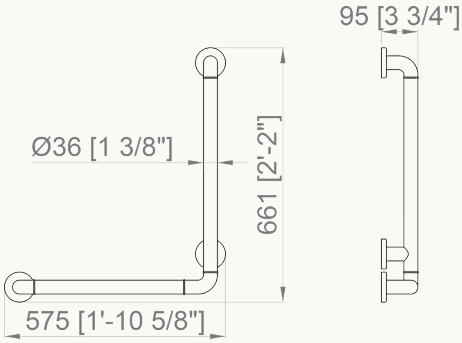

GRAB BARS

nylon

GIAMPIERI dal 1925 rubinetterie milano

Material
Polyamide-coated Aluminum

Finish
WHITE

Bar diameter
36 mm

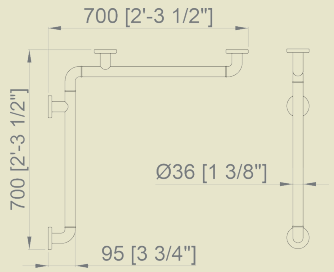

15052.N36

114,00 €

Dimensions
700 x 700 mm

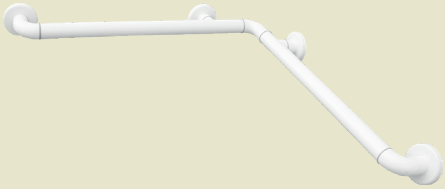

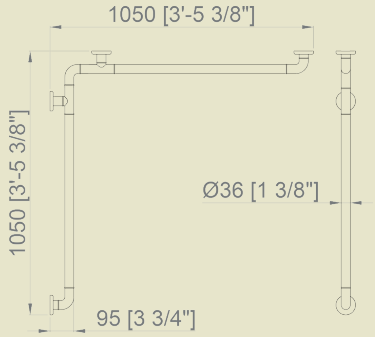

15052.105.N36

260,00 €

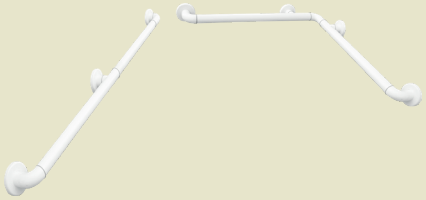

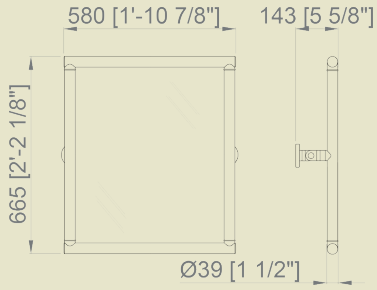

08025.N36

258,00 €

Reclining mirror



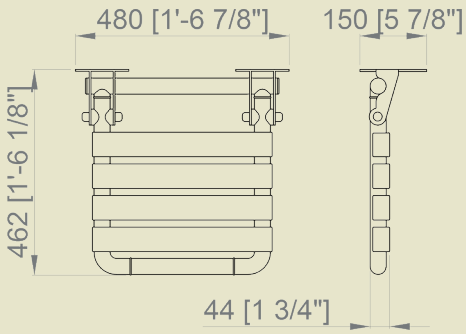

15042.N36

316,00 €

Folding seat

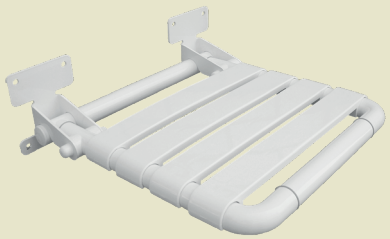

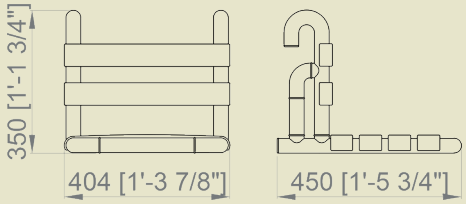

15042.MOV.N36

403,00 €

Removable seat with backrest



nylon folding seats

Material
Antibacterial Polypropylene. AISI 304 stainless steel wall fixations

Finish
WHITE (.W)

NEW



15042.NBA

250,00 €

Folding seat

Dimensions
80 x 420 x 420 mm

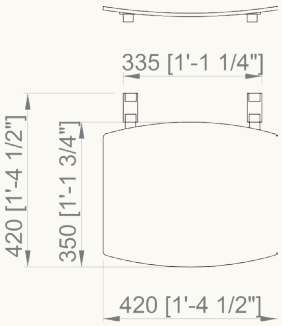



15042.FIX.NBA

321,00 €

Folding seat with backrest

Dimensions
446 x 420 x 420 mm

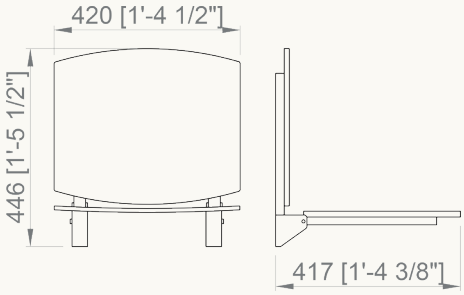



15042.PAT.NBA

337,00 €

Folding seat with backrest and two adjustable legs

Dimensions
740 - 835 x 420 x 420 mm

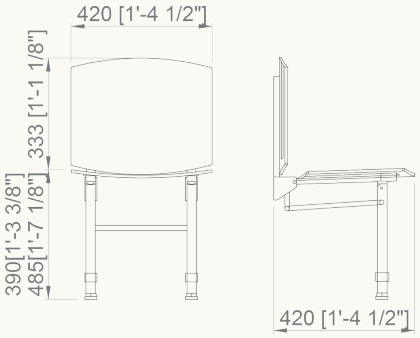



15042.MOV.NBA

250,00 €

Removable and foldable seat with backrest

Dimensions
480 x 420 x 480 mm

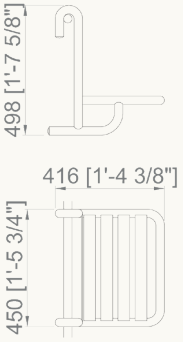



15042.PIE.NBA

262,00 €

Folding seat with backrest and two adjustable legs

Dimensions
407 - 502 x 420 x 420 mm

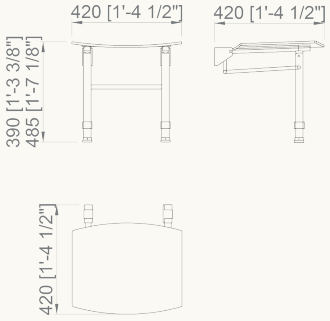

shower folding seats

Material
AISI 304 stainless steel

Finish
SATIN (.S)
POLISH (.B)
WHITE (.W)

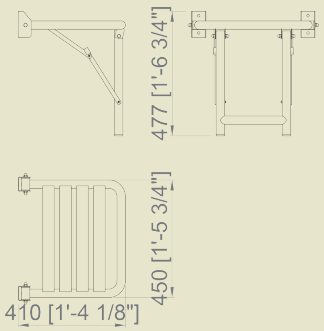

15045.S	15045.B
215,50 €	227,50 €

15045.W
239,00 €

With double support to floor

Dimensions
440 x 450 x 410 mm



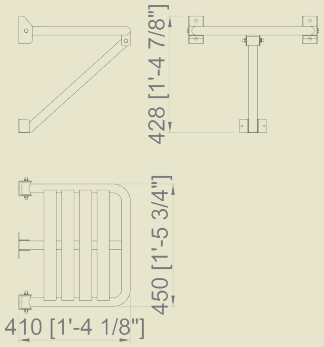

15046.S	15046.B
203,00 €	207,00 €

15046.W
208,00 €

With wall support

Dimensions
346 x 450 x 410 mm



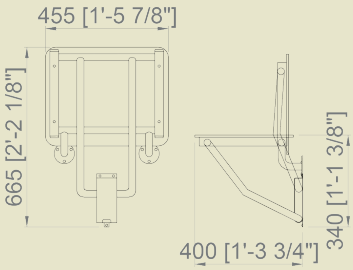

15065.S
213,50 €

With phenolic board seat and wall support

Dimensions
388 x 456 x 400 mm

NEW



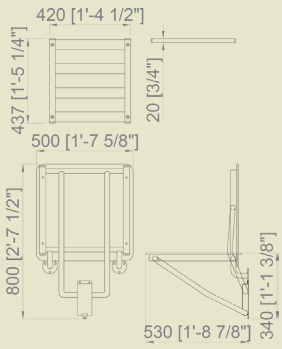

15065.50.S
226,00 €

With phenolic board seat and wall support

Dimensions
Seat: 340 x 500 x 530 mm
Closed: 800 x 500 mm

15077.S	127,00 €

Backrest for shower seat

NEW



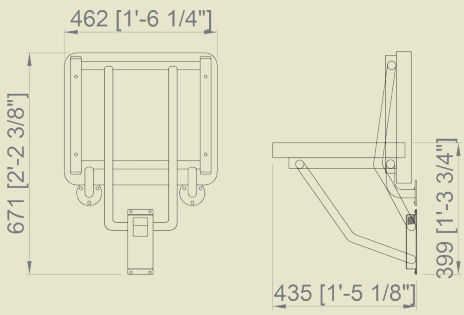

15066.S
279,50

With seat cushion and wall support

Dimensions
425 x 450 x 420 mm



shower folding seats

FOLDING SHOWER SEATS



15041.S

174,50 €

Material
AISI 304 stainless steel

Dimensions
100 x 434 x 454 mm

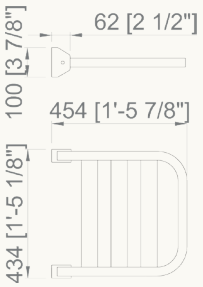



15067.2.W

100,50 €

Material
Aluminium and ABS

Dimensions
100 x 434 x 454 mm

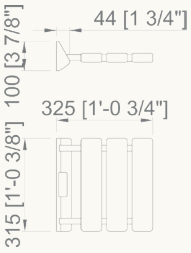

NEW



15074.L

471,00 €

With double seat of phenolic board and wall support

Material
AISI 304 stainless steel and phenolic board

Dimensions
100 x 434 x 454 mm

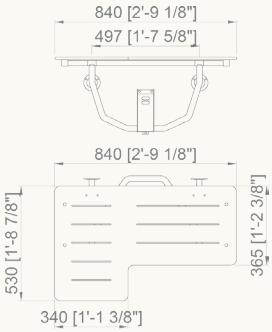

NEW



15035.W

135,00 €

With support to floor

Material
Aluminium and polypropylene

Dimensions
480x 360 x 407 mm

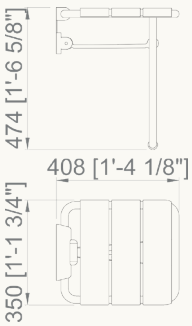

BATH AND SHOWER SEATS



15042.MOV.S	**317,00 €**
15042.MOV.B	**323,00 €**
15042.MOV.W	**323,00 €**

Removable shower seat (non-folding)

Dimensions
498 x 450 x 416 mm

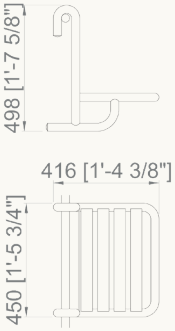

shower vasche

Material
Polyester resin

Finish
GELCOAT WHITE POLISH

NEW



H500 **Consult**

Height-adjustable bath with powered seat elevation and rotation. Operation through a waterproof pneumatic control panel. Drain 1 “1/4. Weight: 185 kg. Maximum seat load: 150 kg Capacity 209 litres. Available left and right version

Dimensions
1085 x 1600 x 700-800 mm



H501 **Consult**

Full length bath with walk-in facility and seat lift. Drain 1 “1/4. Maximum seat load: 165 kg. Capacity: 190 litres. Available left and right version

Dimensions
565 x 1500 x 700 mm
565 x 1700 x 700 mm



H502 **Consult**

Bath with frontal walk-in facility. Drain 1”-1/4. Weight: 41 kg

Dimensions
930 x 660 x 980 mm



H503 **Consult**

Bath with side walk-in facility. Available left and right version

Dimensions
900 x 1245 x 660 mm



H504 **Consult**

Bath with side walk-in facility. Available left and right version

Dimensions
930 x 950 x 660 mm

shower shower seats

BATH AND SHOWER SEATS



15043.N

541,00 €

Bathtub seat

Dimensions
260 x 700 x 480 mm

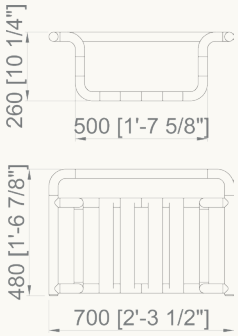



Material
Nylon-coated aluminum

15044.N **168,50 €**

Dimensions
250 x 355 x 320 mm

15045.N **199,00 €**

Dimensions
420 x 550 x 320 mm

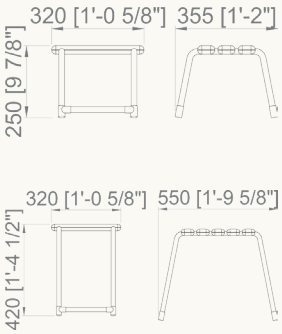



15036.W

34,80 €

Material
ABS

Dimensions
440 x 390 x 390 mm

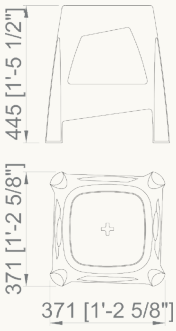



15037.W

150,50 €

With aluminium adjustable feet

Material
White polypropylene

Dimensions
450-550 x 350 x 369 mm

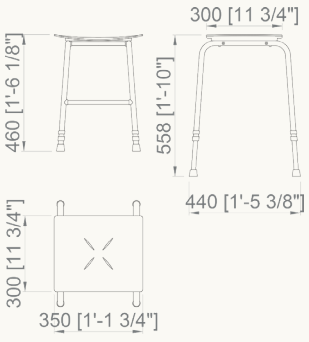



15038.W

145,70 €

Stainless steel AISI 304 feet

Material
White polypropylene

Dimensions
390 x 420 x 420 mm

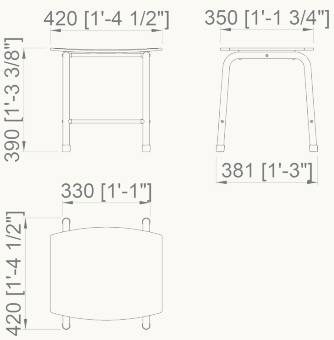

Material
White ceramic

ERGONOMIC TOILETS TO FLOOR

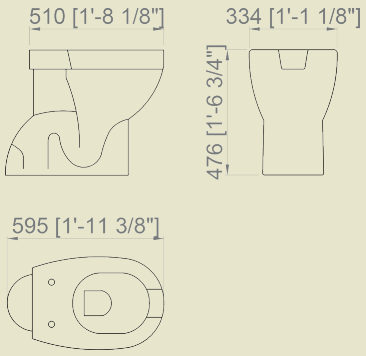

21S

155,00 €

Toilet to floor with vertical outlet. Front opening.

Cover S21 not included (Price: 0,00 €)

Dimensions
470 x 355 x 500 mm



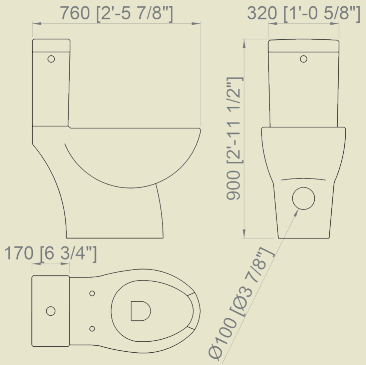

21M

499,00 €

Toilet to floor with vertical / horizontal outlet. Front opening.

Cover 13144.I not included (Price: 96,50 €)

Dimensions
900 x 380 x 760 mm



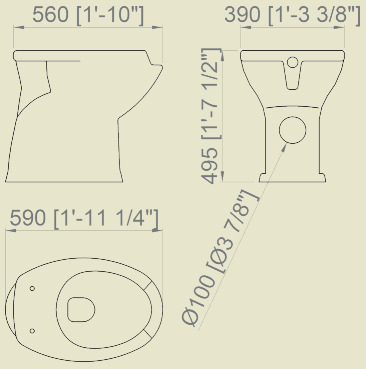

31P

195,00 €

Toilet to floor with horizontal outlet. Front opening.

Cover 13144.I not included (Price: 96,50 €)

Dimensions
495 x 390 x 640 mm



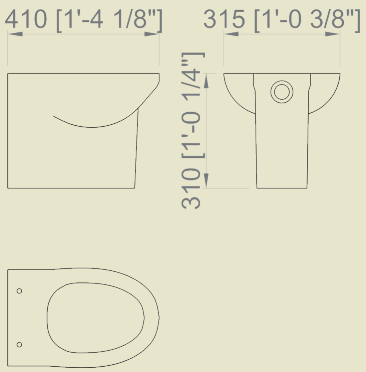

13146S

275,00 €

Toilet to floor with outlet to ground.

Cover 13145 not included (Price: 98,50 €)

Dimensions
310 x 305 x 410 mm



Material
White ceramic

WALL-HUNG ERGONOMIC TOILETS



H50

320,00 €

Wall-hung toilet

Cover 13144.I not included (Price 96,50 €)

Frame 304 not included (Price 228,50 €)

Dimensions
450 x 380 x 750 mm

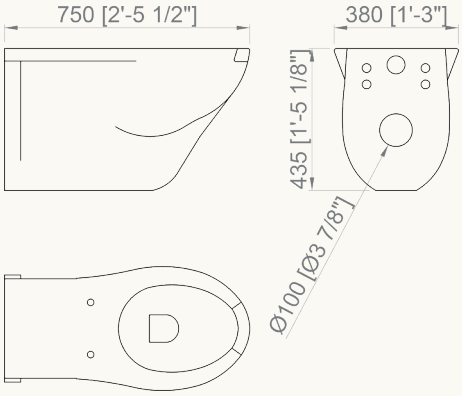



H50M

595,00 €

Wall-hung monobloc toilet

Cover 13144.I not included (Price 96,50 €)

Frame 304 not included (Price 228,50 €)

Dimensions
845 x 380 x 750 mm

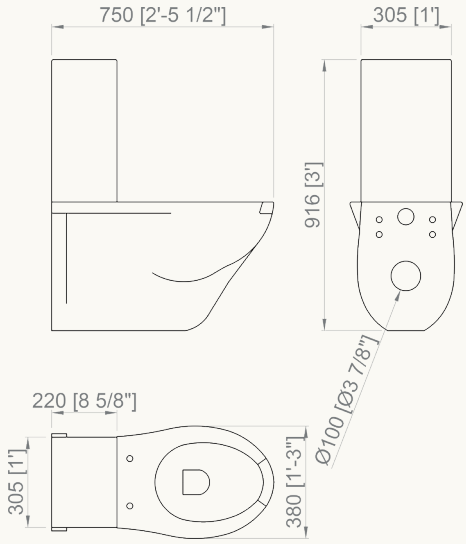

TOILET ACCESSORIES



C1

70,20 €

Manually-operated cistern. Includes toilet connection tube

Material
ABS

Dimensions
330 x 445 x 123 mm



13182.B

69,80 €

Embedded pneumatic manual control with push-button for cistern 13181



13184.B

85,50 €

Manual pneumatic external control with push-button for cistern 13181



15075.BK

149,00 €

Polyurethane padded backrest

Material
Padded backrest finished in polyurethane in black colour. Support to wall with AISI 304 stainless steel tube

TOILET KITS

13142.KIT

326,00 €



Toilet kit consist of:

21	Toilet with outlet to ground
C1	ABS cistern
2040AR	Seat with cover

H42

738,00 €



Toilet kit consist of:

21	Toilet with outlet to ground
C1	ABS cistern
2040AR	Seat with cover
186D	Thermostatic mixer lever for personal hygiene

13143.KIT

474,00 €



Toilet kit consist of:

31	Toilet with outlet to wall
C1	ABS cistern
13144.I	Seat with cover

H42A

835,50 €



Toilet kit consist of:

31	Toilet with outlet to wall
C1	ABS cistern
13144.I	Seat with cover
186D	Thermostatic mixer lever for personal hygiene

TOILET SEATS



16SS

81,70 €

Toilet seat with hygienic opening.

Universal adaptation

Material
Durolux



2040AR

64,80 €

Toilet seat with hygienic opening and cover.

Universal adaptation

Material
Durolux



13144.I

96,50 €

Toilet seat with hygienic opening and cover.

Universal adaptation

Material
White polyester

mobility

ERGONOMIC WASHBASIN



H5
150,00 €

Deep washbasin.
Concave elbow supports and front

Accessories not included

Material
White ceramic

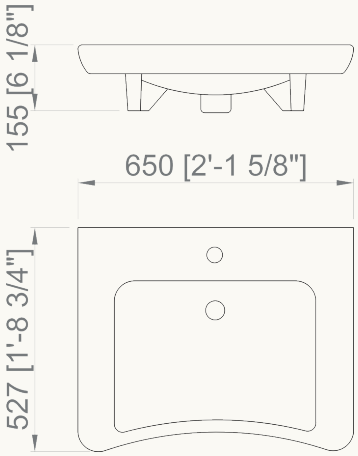



303A	**74,30 €**

Fixed bracket for washbasin H5



303B	**171,50 €**

Manual recliner stand for washbasin H5



303C	**278,40 €**

Pneumatic recliner stand for washbasin H5



302P
97,90 €

Set built-in siphon, hose and valve for washbasin H5



302A
114,50 €

Set siphon on surface, flexible hose and valve for washbasin H5

WASHBASIN KITS

H14
336,00 €

Washbasin kit consists of:

- H5
- 303A
- 302A
- 07200.B



H11
440,00 €

Washbasin kit consists of:

- H5
- 303B
- 302A
- 07200.B



H12
522,00 €

Washbasin kit consists of:

- H5
- 303C
- 302A
- 07200.B



mobility

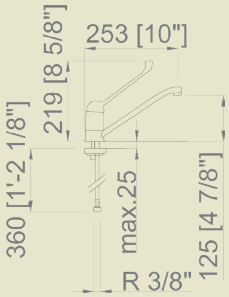

07200.B

45,60 €

One handle mixer faucet with clinical lever. Countertop installation. Suitable for washbasin H5



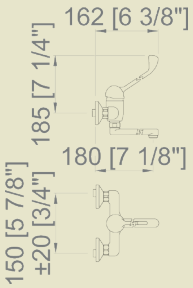

07201.B

241,00 €

One handle mixer faucet with clinical lever. Wall installation.



SHOWER FOR BIDET



186D

449,00 €

Wall thermostatic mixer for personal hygiene

Operated by lever

NEW



187D

37,90 €

Bidet hand shower with automatic return lever and continuous flow position in chromed ABS, holder in ABS and 120cm reinforced flexible PVC hose

NEW



188D

26,10 €

Bidet hand shower with automatic return lever and continuous flow position in black ABS, holder in ABS and 120cm reinforced flexible PVC hose

HELP KIT

HELP KIT contents:

· H5: Ergonomic wash basin
· 303A: Fixed support for wash basin H5
· 21S: Floor settled toilet pan
· 2040AR: Toilet seat for 21S
· 07200.B: Mixer with lever
· 15054.45.F: Straight bar 45 cm
· 15054.60.F: Straight bar 60 cm
· 15051.60.F: 60cm swing-up grab bar
· 08026.W: Mirror
· C1: Cistern

dal 1925 GIAMPIERI rubinetterie milano

HELP KIT

HK

720,20 €

INCREASED SEATS



15032.W

58,80 €

Ergonomic seat with cover

Elevator supplement 100 mm

Material
Polypropylene

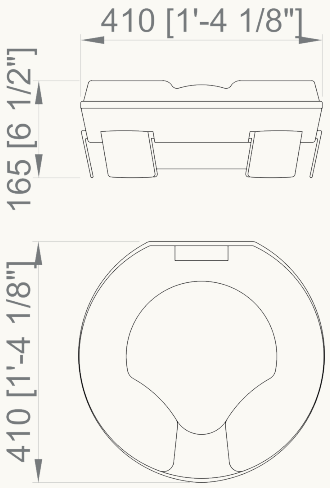



15033.W

69,70 €

Ergonomic seat with cover

Elevator supplement 100 mm

Material
Polypropylene

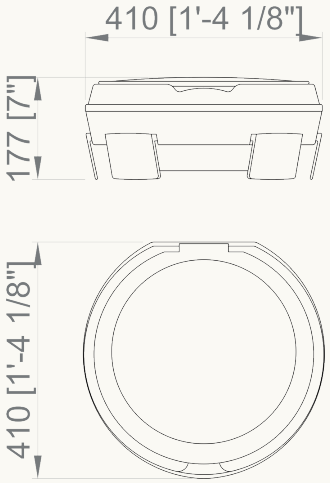



15034.W

186,50 €

Ergonomic seat without cover and with handles

Elevator supplement 100 mm

Material
Polypropylene

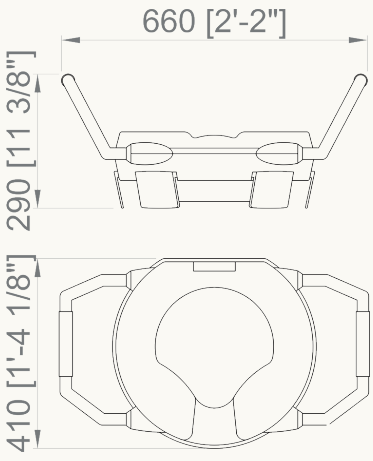

INCREASED SEATS

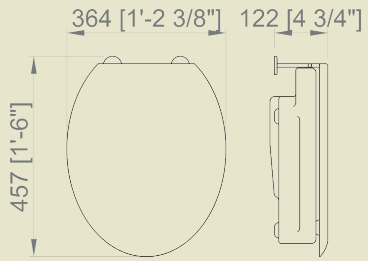

K10

357,00 €

Toilet seat with hygienic front opening, height adjuster of 100 mm and cover

Universal adjustment.
Elevator supplement 100 mm

Material
Durolux



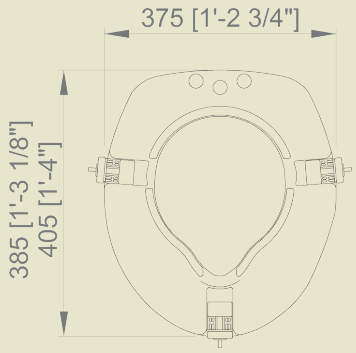

15039.W

119,00 €

Ergonomic seat with cover

Universal adjustment.
Elevator supplement 100 mm

Material
Duraplast seat
Polyester cover



SHOWER TRAYS

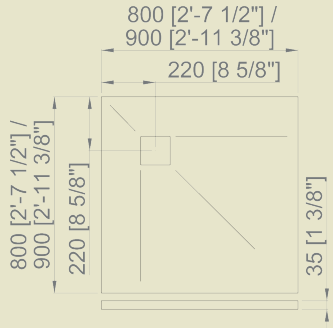

Adapted shower tray

Material
Acrylic resin

Square model

13220.8080.K

515,00 €

Dimensions
800 x 800 mm

13220.9090.K

605,00 €

Dimensions
900 x 900 mm

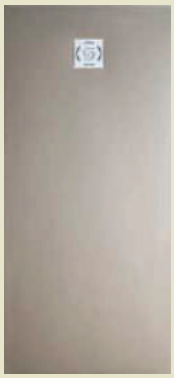

NEW

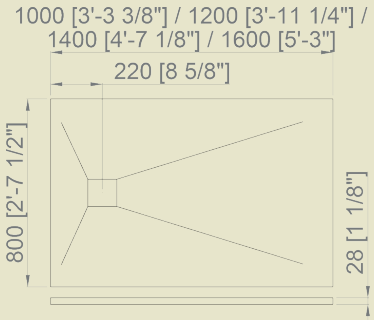

Slab model

13220.80100.K

534,00 €

Dimensions
800 x 1000 mm

13220.80120.K

605,00 €

Dimensions
800 x 1200 mm

13220.80140.K

689,00 €

Dimensions
800 x 1400 mm

13220.80160.K

725,00 €

Dimensions
800 x 1600 mm

RECLINING MIRRORS

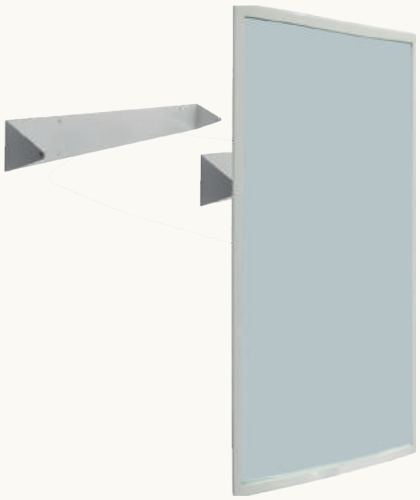

Material
AISI 304 stainless steel

Dimensions
800 x 600 mm

Other sizes available on request

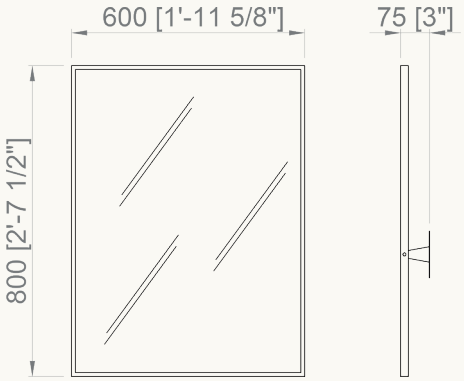

SATIN (.S)



08024.S
238,50 €

POLISH (.B)



08024.B
238,50 €

WHITE (.W)



08024.W
178,50 €

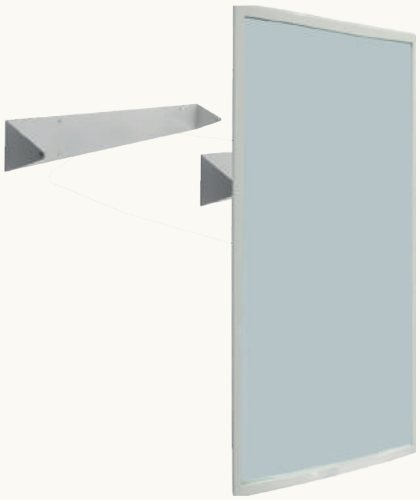

Material
AISI 304 stainless steel

Dimensions
700 x 500 mm

Other sizes available on request

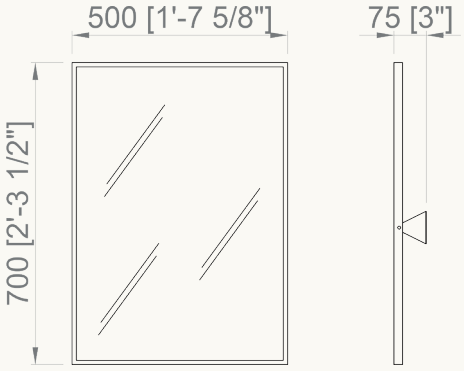

SATIN (.S)



08023.S
238,50 €

POLISH (.B)



08023.B
238,50 €

WHITE (.W)



08023.W
178,50 €

RECLINING MIRRORS

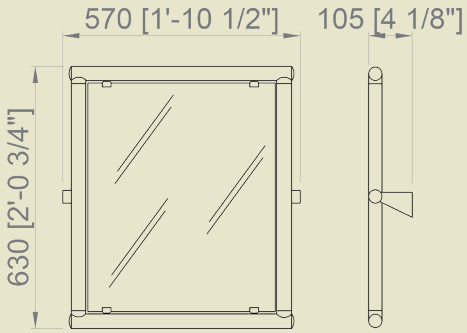

08025.W

352,00 €

Material
Nylon coated aluminium

Dimensions
630 x 570 x 105 mm



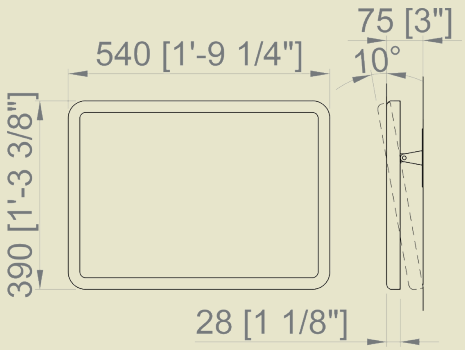

08026.W

104,00 €

Material
White ABS frame, stainless steel wall support

Dimensions
390 x 540 x 75 mm



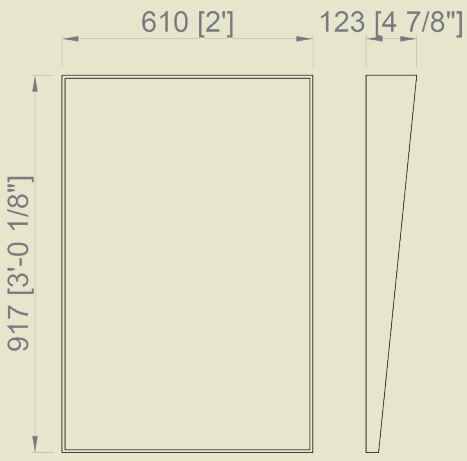

08053.S

255,00 €

Mirror reclining without regulation

Material
Stainless steel AISI 304 frame

Dimensions
917 x 610 x 75 mm



NEW

EMERGENCY

· **Essential aid** in case of incident caused by fire or contamination by acids, alkalis or solvents.

· **Very wide field of application:** for all type of industries and laboratories.

· **First-aid procedure**. first aid for whatever damage or burn by acids, alkalis or radioactive and irritant chemicals, involves removing the harmful chemical by washing the concerned body part as soon as possible with plenty of water: this way of acting makes, in almost the all the cases, to eliminate the consequences, however, delaying the aids can may be fatal.

· The emergency showers and eye washers fully satisfy the **normative** required specifications:

* UNE-EN 15154-1 Plumbed-in body showers for laboratoires normative.

* UNE-EN 15154-2 Plumbed-in eye wash units normative.

* ANSI Z358.1-2004 (American National Standard Intittute) eyewashers and emergency showers regulations.

· In compliance with the regulation, the minumum eyewasher water flow has to be 6 litres/minute and for the emergency showers 100 litres/ minute. **The BOCCHISafeWork NOFER emergency showers and eyewashers** overcome the requirements, having a maximum water flow of 14 litres/minute for the eyewasher and 120 litres/minute for the emergency shower.

· **EYEWASHER:** material: polypropylene / stainless steel. Connections brass. Aerated flow. Maximum water flow: 14 litres/minute 310% (at 0,3 MPa). Minimum required water flow: 6 litres/minute at 0,2 MPa. Color: Green RAL 6029.

· **EMERGENCY SHOWERS:** Shower head: polypropylene / stainless steel. Connections: brass. Tube: Galvanized steel. Water flow: 120 litres/minute at 0,3 MPa. Finish: epoxy painted. Minimum required water flow: 100 litres/minute at 0,2 MPa. Color: Green RAL 6029.





...regardless of their origin, race,
their customs, their limitations...

NOFER®

emergency

BOCCHI SafeWORK

Material
Galvanized steel

Connections
Brass

Finishing
Painted with epoxy in green colour



Emergency wall eyewasher

Operation
Manual side lever

SC300.
286,00 €

Material
Polypropylene collector

SC300SS
435,00 €

Material
Stainless steel collector

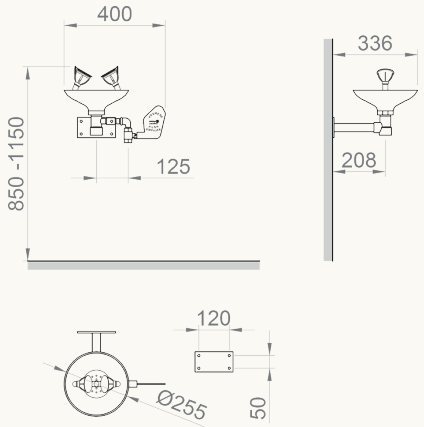



Emergency eyewasher with pedestal

Operation
Manual side lever

SC320.
334,00 €

Material
Polypropylene collector

SC320SS
434,00 €

Material
Stainless steel collector

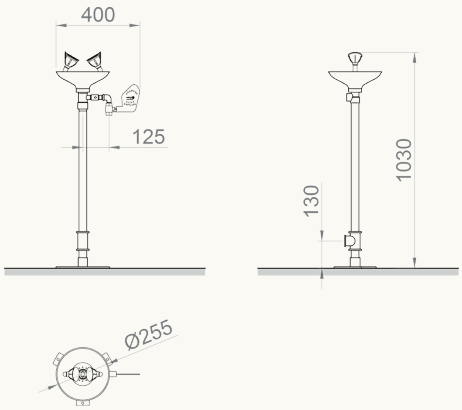



Emergency eyewasher with pedestal

Operation
Manual side lever and pedal

SC380.
382,00 €

Material
Polypropylene collector

SC380SS
482,00 €

Material
Stainless steel collector

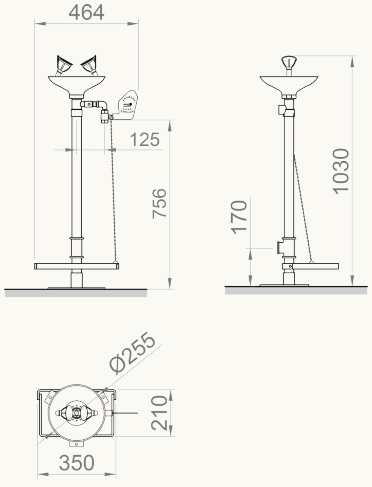

emergency

BOCCHI SafeWORK®

Material
Galvanized steel

Connections
Brass

Finishing
Painted with epoxy in green colour

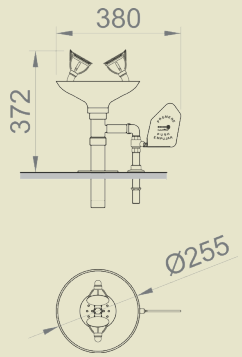

Eyewasher with aerated jets, manual shutoff valve. Countertop installation

Operation
Manual side lever

SC410.
320,00 €

Material
Polypropylene collector

SC410SS
420,00 €

Material
Stainless steel collector



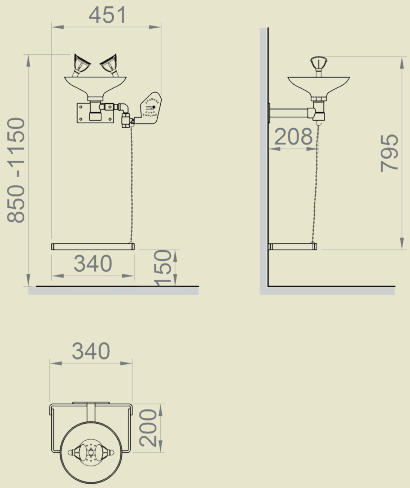

Eyewasher with aerated jets, manual shutoff valve. Wall installation

Operation
Manual side lever

SC310.
339,00 €

Material
Polypropylene collector

SC310SS
439,00 €

Material
Stainless steel collector



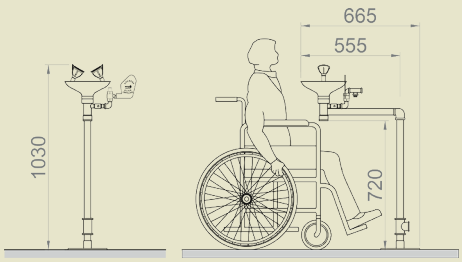

Adapted floor-mount eyewasher

Operation
Manual side lever

SC330.
450,00 €

Material
Polypropylene collector

SC330SS
550,00 €

Material
Stainless steel collector



emergency

BOCCHI SafeWORK

Material
Galvanized steel

Connections
Brass

Finishing
Painted with epoxy in green colour

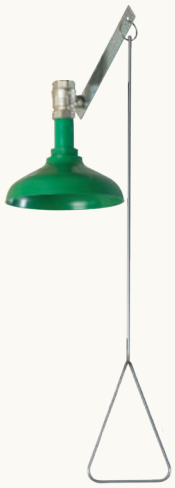

Emergency shower, installation in ceiling

Operation
Rigid brace with triangular grip

SC820.
122,00 €

Material
Polypropylene sprayer

SC820SS
222,00 €

Material
Stainless steel sprayer

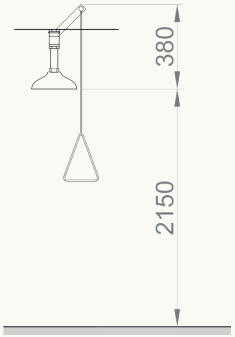

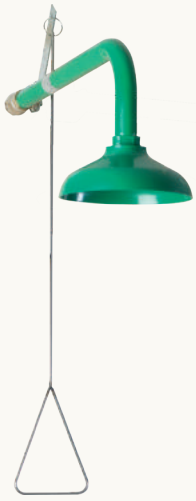

Emergency shower, wall installation

Operation
Rigid brace with triangular grip

SC830.
148,00 €

Material
Polypropylene sprayer

SC830SS
248,00 €

Material
Stainless steel sprayer

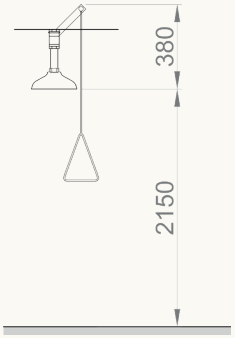



Emergency shower

Operation
Rigid brace with triangular grip

SC800.
307,00 €

Material
Polypropylene sprayer

SC800SS
407,00 €

Material
Stainless steel sprayer

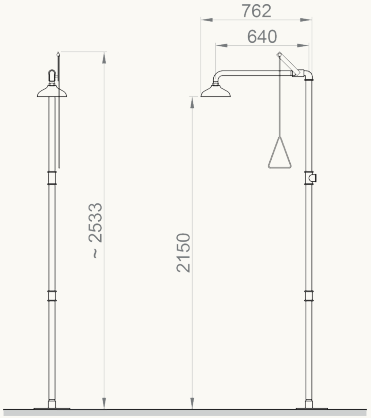

Material
Galvanized steel

Connections
Brass

Finishing
Painted with epoxy in green colour

emergency

BOCCHI SafeWORK®

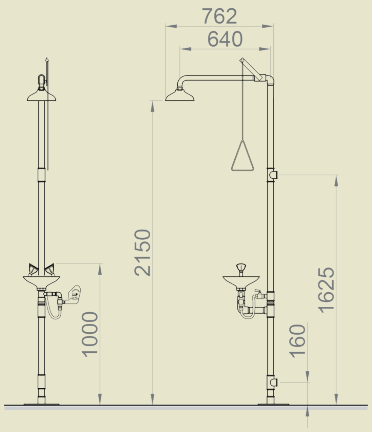

Emergency eyewash and shower combination

Operation shower
Rigid brace with triangular grip

Operation eyewasher
Manual side lever

SC700.
631,00 €

Material
Shower sprayer and collector of polypropylene

SC700SS
831,00 €

Material
Shower sprayer and collector of stainless steel



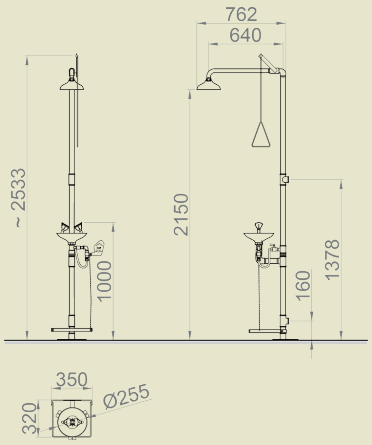

Emergency eyewash and shower combination

Operation shower
Rigid brace with triangular grip

Operation eyewasher
Manual side lever and pedal

SC710.
694,00 €

Material
Shower sprayer and collector of polypropylene

SC710SS
894,00 €

Material
Shower sprayer and collector of stainless steel



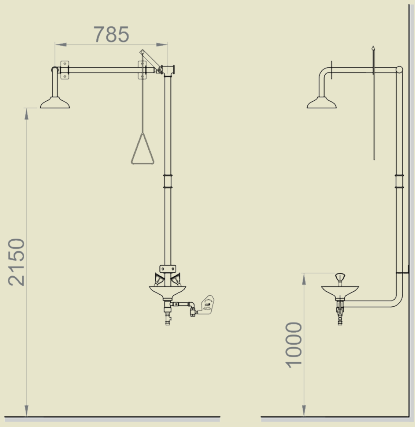

Set over-door shower and eyewasher

Operation
Manual side lever

SC740.
700,00 €

Material
Shower sprayer and collector of polypropylene

SC740SS
900,00 €

Material
Shower sprayer and collector of stainless steel



emergency

BOCCHI SafeWORK

Material
Galvanized steel

Connections
Brass

Finishing
Painted with epoxy in green colour

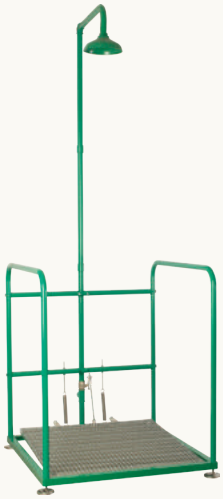

Platform with shower

Operation
Sill plate

SCP800.
901,00 €

Material
Polypropylene sprayer

SCP800SS
1001,00 €

Material
Stainless steel sprayer

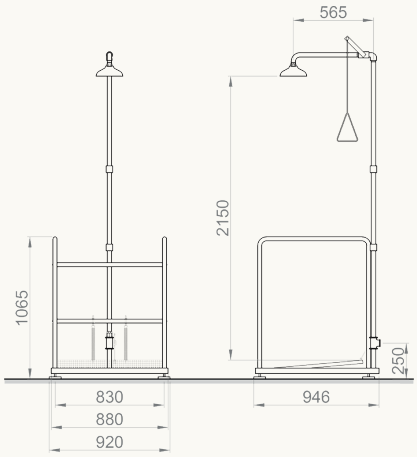

Platform with eyewasher

Operation
Manual side lever

SCP380.
843,00 €

Material
Polypropylene collector

SCP380SS
943,00 €

Material
Stainless steel collector



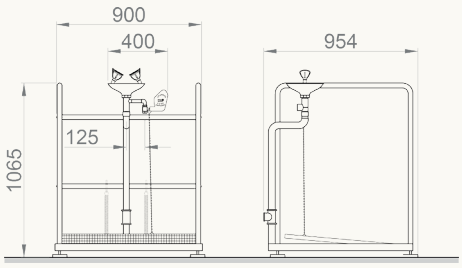



Platform with shower and eyewasher self-draining antifreeze valve with independent shower through pull chain

Operation shower
Rigid drawbar with triangular handle in shower

Operation eyewasher
When stepping on the platform the eyewasher is switched on

SCP730.
1839,00 €

Material
Sprayer and collector of polypropylene

SCP730SS
2039,00 €

Material
Sprayer and collector of stainless steel

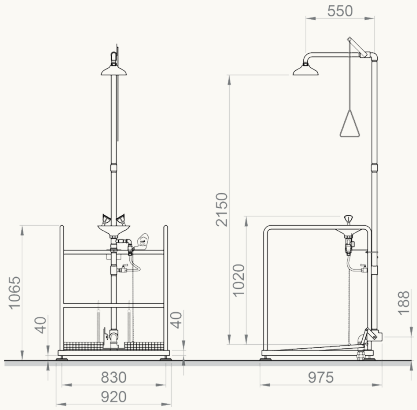

emergency

BOCCHI SafeWORK®

Material
Galvanized steel

Connections
Brass

Finishing
Painted with epoxy in green colour

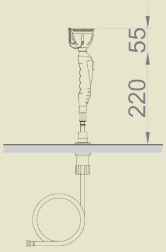

Shower manual removable desktop eyewasher

SC421

182,00 €



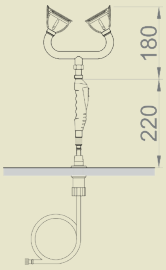

Hand shower double removable desktop eyewasher

SC422

238,00 €





Eyewasher with wall support

SC431

159,00 €





Double eyewasher with wall support

SC432

215,00 €



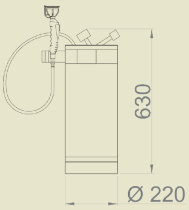

Pressurized portable eyewasher unit

Capacity
18 litres

SC391

625,00 €



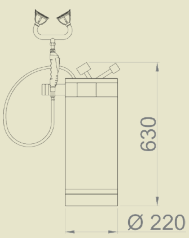

Double pressurized portable eyewasher unit

Capacity
18 litres

SC392

675,00 €



FONTAINES D'EAU FROIDE - FONTES DE AGUA
FRIA - FUENTES DE AGUA - WATER FOUNTAINS
- FONTAINES D'EAU FROIDE - FONTES DE AGUA
FRIA - **FUENTES DE AGUA** - WATER FOUNTAINS
- FONTAINES D'EAU FROIDE - FONTES DE AGUA
FRIA - FUENTES DE AGUA - WATER FOUNTAINS
- FONTAINES D'EAU FROIDE - FONTES DE AGUA
FRIA - FUENTES DE AGUA - **WATER FOUNTAINS**
- FONTAINES D'EAU FROIDE - FONTES DE AGUA
FRIA - FUENTES DE AGUA - WATER FOUNTAINS
- **FONTAINES D'EAU FROIDE** - FONTES DE AGUA
FRIA - FUENTES DE AGUA - WATER FOUNTAINS
- FONTAINES D'EAU FROIDE - FONTES DE AGUA
FRIA - FUENTES DE AGUA - WATER FOUNTAINS
- FONTAINES D'EAU FROIDE - **FONTES DE AGUA**
FRIA - FUENTES DE AGUA - WATER FOUNTAINS
- FONTAINES D'EAU FROIDE - FONTES DE AGUA
FRIA - FUENTES DE AGUA - WATER FOUNTAINS
- FONTAINES D'EAU FROIDE - FONTES DE AGUA
FRIA - FUENTES DE AGUA - WATER FOUNTAINS
- FONTAINES D'EAU FROIDE - FONTES DE AGUA
FRIA - FUENTES DE AGUA - WATER FOUNTAINS
- FONTAINES D'EAU FROIDE - FONTES DE AGUA



"Transmit culture all over the world, without distinction of race and categories."

Confucio



...regardless of their origin, race,
their customs, their limitations...

NOFER®

inoxcold

High capacity



10002.S

1285,00 €

Cold water fountain 50L/h

With cupfiller and tap button 2 litre tank.

Casing
AISI 304 stainless steel

Finish
SATIN

Dimensions
980 x 310 x 305 mm

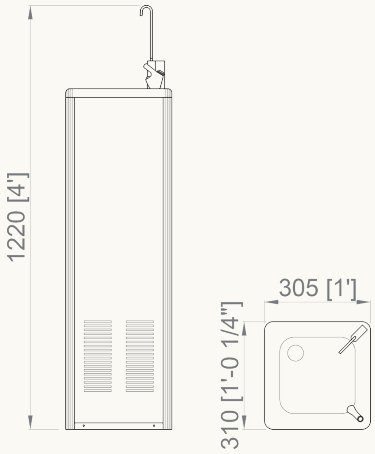



10004.S

1095,00 €

Cold water fountain 25L/h

With push button tap. 2 litre tank.

Casing
AISI 304 stainless steel

Finish
SATIN

Dimensions
980 x 310 x 305 mm

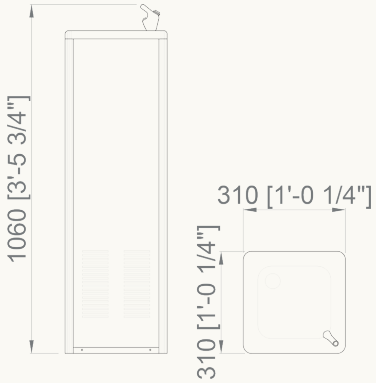



10080.S

1245,00 €

Wall cold water fountain 30L/h

With cupfiller and push button tap. 2 litre tank.

Casing
AISI 304 stainless steel

Finish
SATIN

Dimensions
415 x 310 x 305 mm

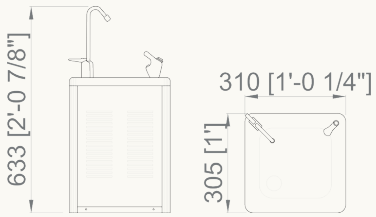

Additional technical information on www.nofer.com

inoxcold

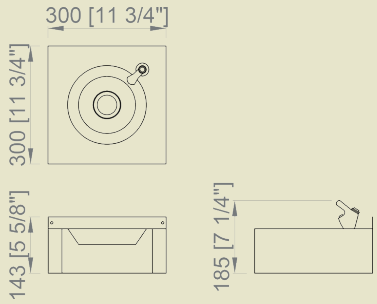

10023.S

328,00 €

Water fountain with faucet

Material
AISI 304 stainless steel

Dimensions
115 x 300 x 300 mm



ACCESSORIES



10010.K

33,60 €

Plastic cup dispenser

Capacity
70 cups



10071.B

72,80 €

Cupfiller faucet



10008.B

79,90 €

Push-button faucet



10005.K

154,50 €

Anti-chlorine filter



10007.K

115,00 €

Anti-chlorine cartridge



13113.B

11,35 €

Trim stopper of stainless steel

	10002.S	12004.S	12080
CHARACTERISTICS			
Cold water flow at 10°C / water inlet T. / Room T.	50 l/h	25 l/h	30 l/h
Voltage	230V	230V	230V
Frequency	50/60Hz	50/60Hz	50/60Hz
Total power	190 W	100 W	170 W
Compressor power	1/6 Hp	1/16 Hp	1/16 Hp
Refrigerant type	R134A	R134A	R134A
Type of condenser	forced ventilation	forced ventilation	forced ventilation
Deposit / compressor	YES - 2 litres	YES - 2 litres	YES - 2 litres
Tap for glass refill	YES	YES	YES
Taps	YES	YES	YES
Water inlet diameter	instant fitting or M G3/8"	instant fitting or M G3/8"	instant fitting or M G3/8"
Water outlet	Ø 22 mm	Ø 22 mm	Ø 22 mm
Water outlet temperature regulation	YES	YES	YES
Jet height adjustment	YES	YES	YES

TABLE À MANGER - FASCIATOI - FRALDAIROS
- CAMBIAPAÑALES - BABY CHANGING UNITS -
TABLE À MANGER - FASCIATOI - FRALDAIROS
- **CAMBIAPAÑALES** - BABY CHANGING UNITS -
TABLE À MANGER - FASCIATOI - FRALDAIROS
- CAMBIAPAÑALES - BABY CHANGING UNITS -
TABLE À MANGER - FASCIATOI - FRALDAIROS
- CAMBIAPAÑALES - BABY CHANGING UNITS -
TABLE À MANGER - FASCIATOI - FRALDAIROS
- CAMBIAPAÑALES - BABY CHANGING UNITS -
TABLE À MANGER - FASCIATOI - FRALDAIROS
- CAMBIAPAÑALES - BABY CHANGING UNITS -
TABLE À MANGER - FASCIATOI - FRALDAIROS
- CAMBIAPAÑALES - BABY CHANGING UNITS -
TABLE À MANGER - **FASCIATOI** - FRALDAIROS
- CAMBIAPAÑALES - BABY CHANGING UNITS -
TABLE À MANGER - FASCIATOI - FRALDAIROS
- CAMBIAPAÑALES - BABY CHANGING UNITS -
TABLE À MANGER - FASCIATOI - FRALDAIROS
- CAMBIAPAÑALES - BABY CHANGING UNITS -
TABLE À MANGER - FASCIATOI - **FRALDAIROS**
- CAMBIAPAÑALES - BABY CHANGING UNITS -
TABLE À MANGER - FASCIATOI - FRALDAIROS



“Our true nationality is mankind.”
Herbert George Wells



...regardless of their origin, race,
their customs, their limitations...

NOFER®

baby changing units



09206.S

2800,00 €

Horizontal detached baby changing unit

Material
AISI 304 stainless steel

Finish
SATIN

Dimensions
650 x 760 x 615 mm (open)
650 x 760 x 165 mm (closed)

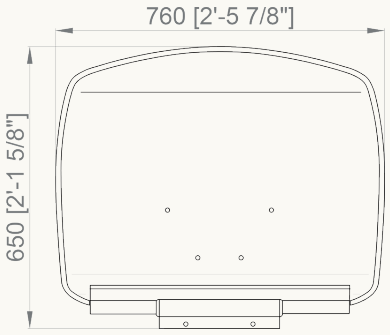



09209.W

396,50 €

Horizontal detached baby changing unit

Permanent antibacterial protection

Material
High density polyethylene

Dimensions
500 x 900 x 490 mm (open)
500 x 900 x 100 mm (closed)

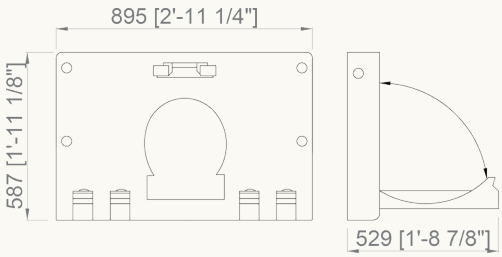



09211.W

164,50 €

Wall chair for babies.

Permanent antibacterial protection

Material
High density polyethylene

Dimensions
476 x 311 x 317 mm (open)
476 x 311 x 143 mm (closed)

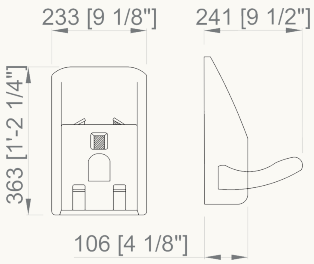

NEW



09215.W

409,00 €

Vertical baby changing unit

Dimensions
458 x 480 x 885 mm (open)
870 x 480 x 126 mm (closed)

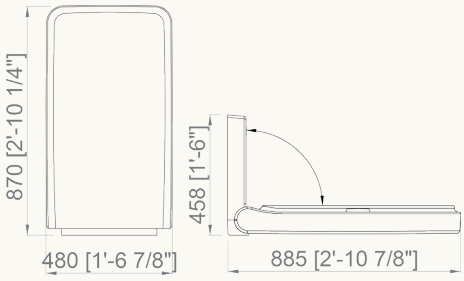

baby changing units NEW

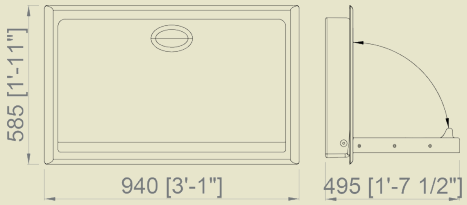

09200.2.S

1380,00 €

Embedded baby changing unit

Material
AISI 304 stainless steel and high density polyethylene

Dimensiones
585 x 940 x 495 mm (open)
585 x 940 x 104 mm (closed)



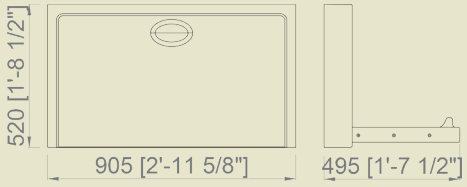

09203.2.S

1380,00 €

Surface baby changing unit

Material
AISI 304 stainless steel and high density polyethylene

Dimensiones
495 x 905 x 495 mm (open)
520 x 905 x 104 mm (closed)



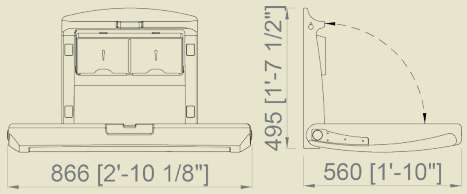

09213.W

362,00 €

Horizontal baby changing unit

Material
High density polyethylene

Dimensiones
495 x 866 x 560 mm (open)
560 x 866 x 110 mm (closed)



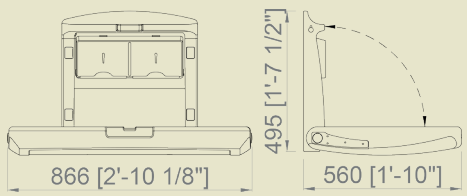

09214.S

835,00 €

Horizontal baby changing unit

Material
High density polyethylene with stainless steel front blade

Dimensiones
495 x 866 x 560 mm (open)
560 x 866 x 110 mm (closed)



ROBINETTERIA - TORNEIRA - GRIFERIA -
FAUCETS - ROBINETTERIE - RUBINETTERIA
- TORNEIRA - **GRIFERÍA** - FAUCETS -
ROBINETTERIE - RUBINETTERIA - TORNEIRA
- GRIFERÍA - **FAUCETS** - ROBINETTERIE -
RUBINETTERIA - TORNEIRA - GRIFERÍA -
FAUCETS - ROBINETTERIE - RUBINETTERIA
- TORNEIRA - GRIFERÍA - FAUCETS -
ROBINETTERIE - RUBINETTERIA - TORNEIRA
- GRIFERÍA - FAUCETS - ROBINETTERIE -
RUBINETTERIA - TORNEIRA - GRIFERÍA -
FAUCETS - ROBINETTERIE - RUBINETTERIA
- TORNEIRA - GRIFERÍA - FAUCETS -
ROBINETTERIE - **RUBINETTERIA** - TORNEIRA
- GRIFERÍA - FAUCETS - ROBINETTERIE -
RUBINETTERIA - TORNEIRA - GRIFERÍA -
FAUCETS - ROBINETTERIE - RUBINETTERIA
- TORNEIRA - GRIFERÍA - FAUCETS -
ROBINETTERIE - RUBINETTERIA - TORNEIRA
- GRIFERÍA - FAUCETS - ROBINETTERIE -
RUBINETTERIA - **TORNEIRA** - GRIFERÍA -
FAUCETS - ROBINETTERIE - RUBINETTERIA
- TORNEIRA - GRIFERÍA - FAUCETS -



"There's only once race: the human race and we are all member of it"

Margaret Atwood



...regardless of their origin, race,
their customs, their limitations...

NOFER®

Material
Chrome-plated brass

Acabado
POLISH (.B)

waterfaucets



07000.B

77,20 €

Push button self-closing faucet. Installed on countertt

Timer
15 sec. at 3 bar, cannot be modified

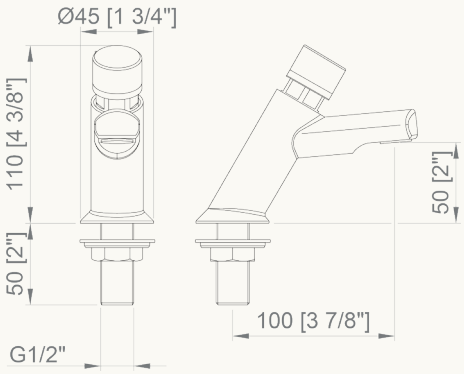



07001.B

81,10 €

One water wall faucet with push timed button. With 6 L/min flow limiter

Timer
15 sec. at 3 bar, cannot be modified

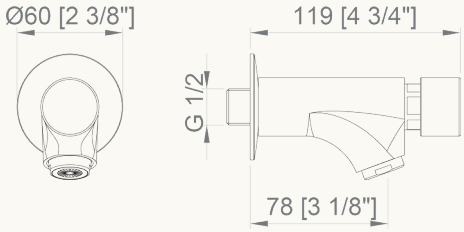



07002.B

117,00 €

One water topcounter faucet with push timed button. With 6 L/min flow limiter

Timer
15 sec. at 3 bar, cannot be modified

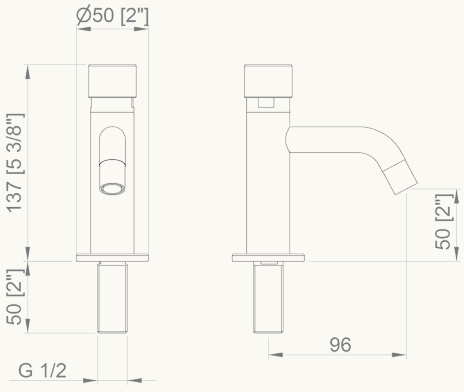



07002M

237,50 €

One water topcounter mixer faucet with push timed button and no-return valves. With 6 L/min flow limiter

Timer
15 sec. at 3 bar, cannot be modified

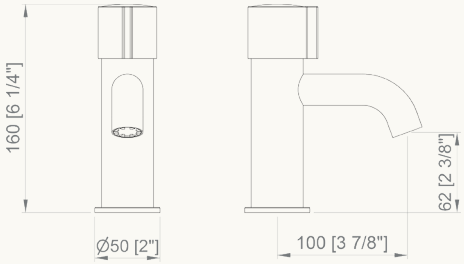

Additional technical information on www.nofer.com

waterfaucets

Material
Chrome-plated brass

Acabado
POLISH (.B)

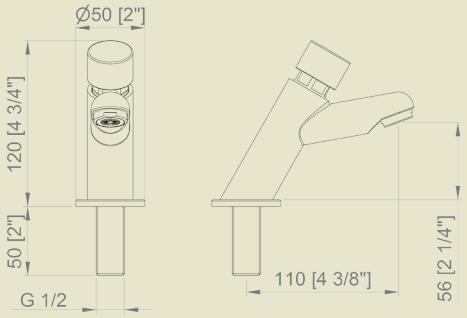

07003.B

82,70 €

One water topcounter faucet with push timed button. With 6 L/min flow limiter

Timer
15 sec. at 3 bar, cannot be modified



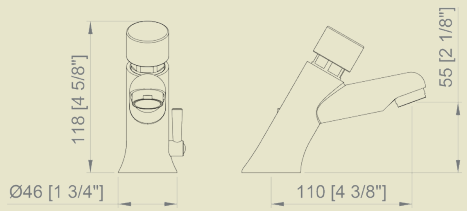

07003M

155,50 €

Mixer countertop faucet with timed button. With 6 L/min flow limiter

Timer
15 sec. at 3 bar, cannot be modified



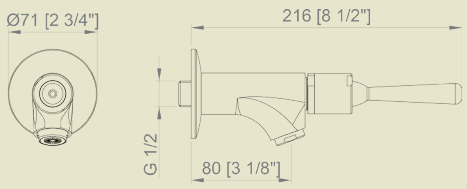

07004.B

116,00 €

One water wall faucet with timed lever. With 6 L/min flow limiter

Timer
15 sec. at 3 bar, cannot be modified

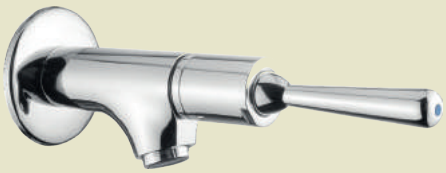

waterfaucets

Material
Chrome-plated brass

Acabado
POLISH (.B)

SPOUTS



07008.B
52,10 €

Wall spout for washbasin

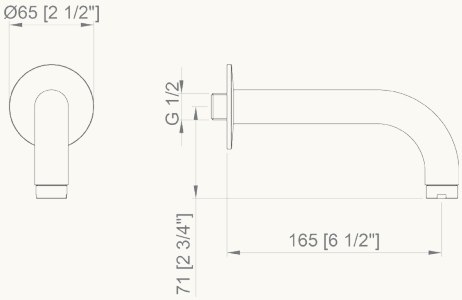



07009.B
91,70 €

Wall spout for washbasin

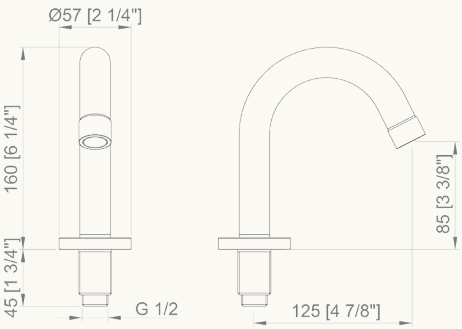



07010.B
47,30 €

Curved wall spout

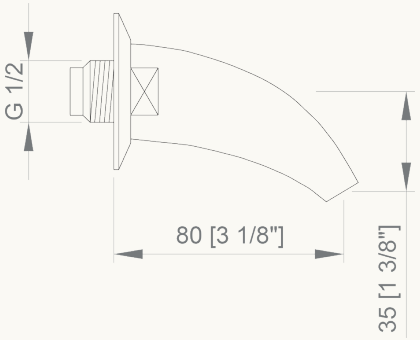

URINAL FAUCET



07052.B
94,80 €

Embedded toilet timed wall faucet with push-button

Timer
8 seconds a 3 bar

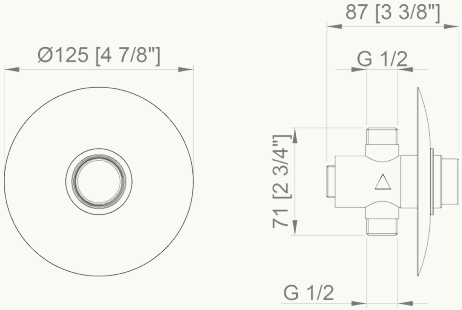

waterfaucets

TOILET FAUCETS

Material
Chrome-plated brass

Acabado
POLISH (.B)

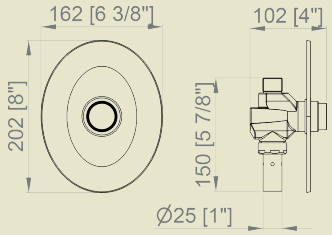

07076.1.B — **185,50 €**

Flush mounted self-closing 1" flushometer

07076.34.B — **181,50 €**

Flush mounted self-closing ¾" flushometer



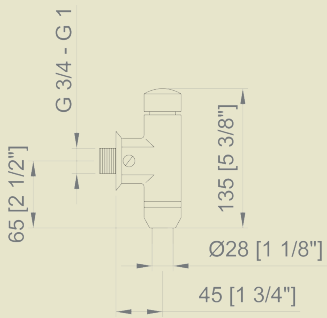

07078.B — **174,50 €**

Wall mounted self-closing ¾" flushometer with shut-off valve

07078.1.B — **186,50 €**

Wall mounted self-closing 1" flushometer with shut-off valve



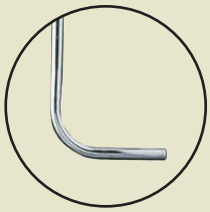

07086.B — **72,40 €**

Flush connection external Ø 28 mm. Suitable for flushometers 07078, 07078.1 and 07079

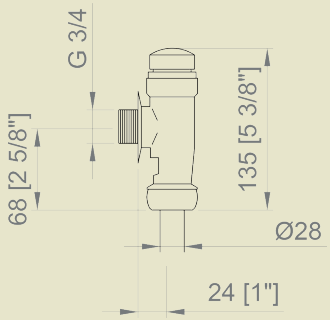

07079.B — **136,00 €**

Wall mounted self-closing ¾" flushometer



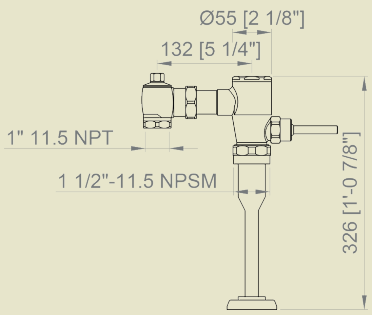

07091.B — **162,00 €**

Urinal flushometer for exposed installation

Dimensions
Inlet ¾" G
Outlet Ø 19 mm

NEW

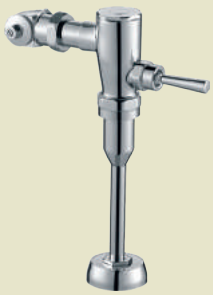

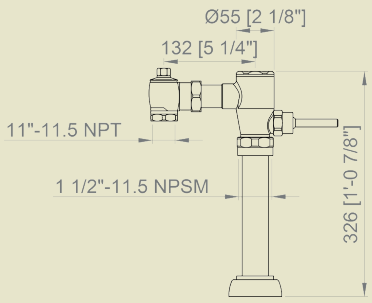

07092.B — **162,00 €**

WC flushometer for exposed installation

Dimensions
Inlet 1" G
Outlet Ø 38 mm

NEW



water

Material
Chrome-plated brass

Acabado
POLISH (.B)



07060.B
94,80 €

Push button self-closing faucet for flush mounted installation

Timer
15 seconds at 3 bar

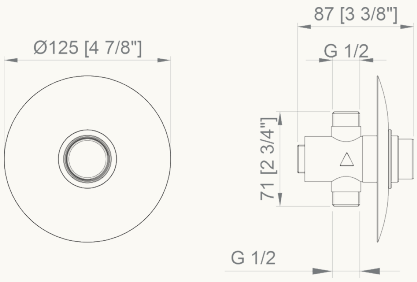



07061.B
100,00 €

Push button self-closing faucet for exposed installation

Timer
15 seconds at 3 bar

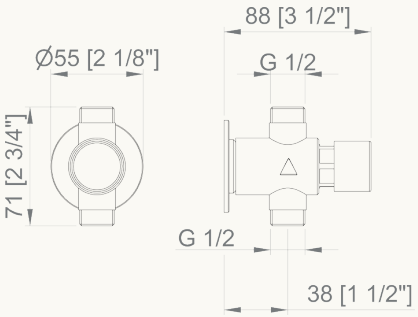



07062.B
302,00 €

Push button self-closing mixer for flush mounted installation

Material
Chrome-plated brass and Chrome-plated ABS

Timer
15 seconds at 3 bar

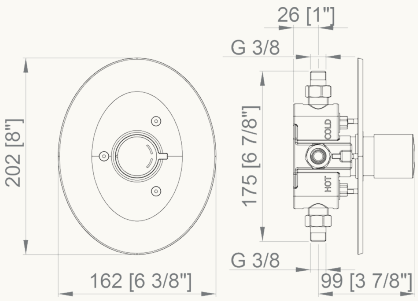



07069.B
462,00 €

Thermostatic self-closing mixer operated by lever

Timer
15 seconds at 3 bar

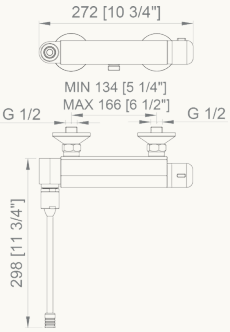

Additional technical information on www.nofer.com

water

Material
Chrome-plated brass

Acabado
POLISH (.B)



07063.B

218,00 €

Shower faucet set with push button, pipe and shower head. Pipe lenght 850mm

Timer
15 seconds at 3 bar

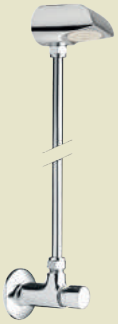

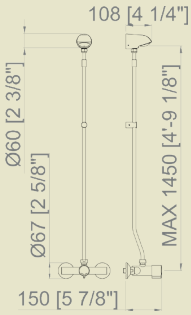

07064.B

466,00 €

Shower mixer set with push button, pipe and shower head. Pipe lenght 850mm

Timer
15 seconds at 3 bar

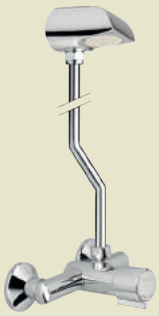

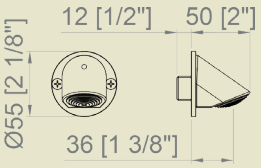

07071.B

79,70 €

Vandal-proof shower head. Flush mounted installation



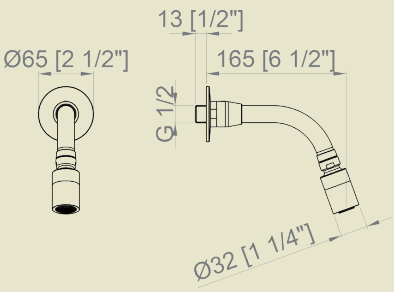

07074.2.B

112,00 €

Vandal-proof shower swinging head. Flush mounted installation



Material
Chrome-plated brass

Acabado
POLISH (.B)

waterfaucets

PEDAL AND FOOT FAUCETS



07106.B
178,00 €

One pedal floor settled faucet

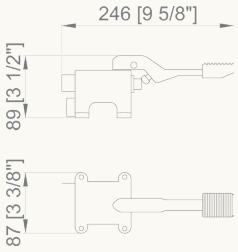



07107.B
263,00 €

One pedal floor settled progressive mixer

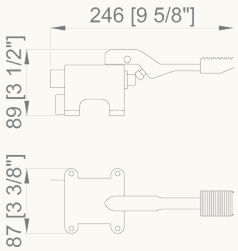



07108.B
266,00 €

Two pedals floor settled mixer

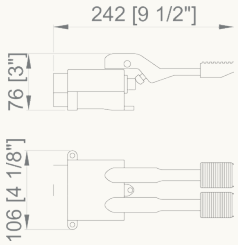



07112.B
141,00 €

Foot operated push button faucet. Flush mounted installation

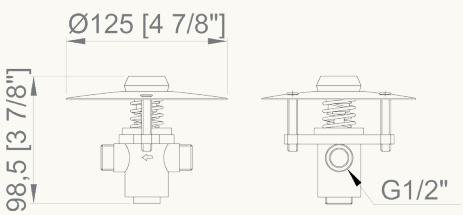

waterfaucets NEW

PROFESSIONAL SINK FAUCETS



07101.B

358,00 €

One water desktop faucet shower type. Water inlet ½".



07102.B

477,00 €

Two waters desktop faucet shower type. Water inlet ½".



07100.B

776,00 €

Large lever operated mixer. Installation on countertop. Water inlet ½".



07102.CC

635,00 €

Cold / hot water faucet with one extra spout. Installation on countertop. Water inlet ½".



07102M.CC

876,00 €

Lever operated mixer with one extra spout. Wall mounted installation. Water inlet ½".



07103.B

73,90 €

Swivel spout. Water inlet ½"

Dimensions
290 x 190 mm

INSECTES - UCCIDERE INSETTI - MATA INSETOS - MATA INSECTOS - INSECT KILLER - TUER INSECTES - UCCIDERE INSETTI - MATA INSETOS - **MATA INSECTOS** - INSECT KILLER - TUER INSECTES - UCCIDERE INSETTI - MATA INSETOS - MATA INSECTOS - **INSECT KILLER** - TUER INSECTES - UCCIDERE INSETTI - MATA INSETOS - MATA INSECTOS - INSECT KILLER - **TUER INSECTES** - UCCIDERE INSETTI - MATA INSETOS - MATA INSECTOS - INSECT KILLER - TUER INSECTES - **UCCIDERE INSETTI** - MATA INSETOS - MATA INSECTOS - INSECT KILLER - TUER INSECTES - UCCIDERE INSETTI - MATA INSETOS - MATA INSECTOS - INSECT KILLER - TUER INSECTES - UCCIDERE INSETTI - **MATA INSETOS** - MATA INSECTOS - INSECT KILLER - TUER INSECTES - UCCIDERE INSETTI - MATA INSETOS - MATA INSECTOS - INSECT KILLER - TUER INSECTES - UCCID TTI - MATA INSETOS - MATA INSE SECT



“Get a career of humanity.
Commit to fight for values of equality”

Martin Luther King



...regardless of their origin, race,
their customs, their limitations...

NOFER®

killer insect-killer



17054.A.3

133,00 €

Insect-killer, 2 tubes 8W. Coverage 40 m²

Casing
Aluminium with ABS side covers

Dimensions
262 x 365 x 130 mm

Spare tube
06020.08 (Price: 8,87 €)

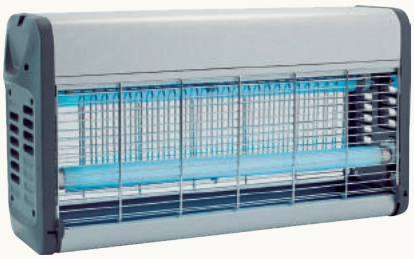

17055.A.3

151,00 €

Insect-killer, 2 tubes 15W. Coverage 80 m²

Casing
Aluminium with ABS side covers

Dimensions
262 x 514 x 130 mm

Spare tube
06020.15 (Price: 19,00 €)



17055.I.3

303,00 €

Insect-killer, 2 tubes 20W. Coverage 120 m²

Casing
Stainless steel

Dimensions
262 x 670 x 130 mm

Spare tube
06020.20 (Price: 34,20 €)



17057.I.3

443,00 €

Insect-killer, 2 tubes 40W. Coverage 240 m²

Casing
Stainless steel

Dimensions
262 x 670 x 130 mm

Spare tube
06020.40 (Price: 34,40 €)



17060.3.S

234,00 €

Insect-killer, 1 tube de 18W. Coverage 25 m²

Dimensions
200 x 465 x 170 mm

Casing
Aluminium

Spare tube
06020.18 (Price: 0,00 €)

Consumable
06019.3 (Price: 25,90 €)

Material
ABS

ambient

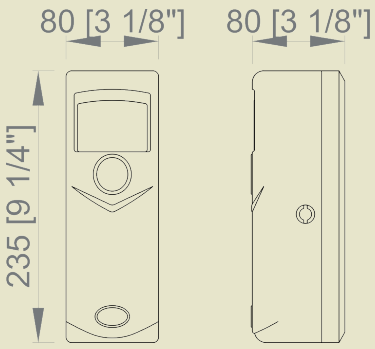

17051.2.W
48,60 €

Wall mounted rechargeable air freshener. Battery operation (2x1,5V).
Timer (adjustable 5-60s)

Finish
WHITE

Dimensions
238 x 83 x 86 mm





06016.2.K
10,20 €
Refill

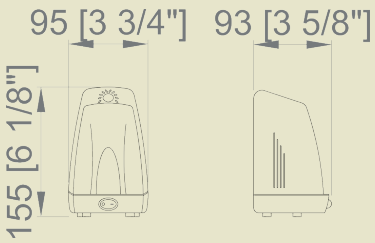

17030.W
65,80 €

Wall mounted rechargeable air freshener.
Power 10 W.

Finish
WHITE

Dimensions
190x 100 x 90 mm





06030.K
23,00 €
Refill

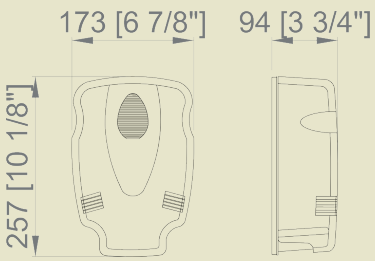

Wall mounted rechargeable air freshener

Dimensions
230 x 120 x 90 mm

17100.W
117,00 €
Finish
WHITE

17100.B
153,00 €
Finish
CHROME-PLATED





06050.K
28,70 €
Refill

ADVERTISING SUPPORT & PROMOTION

Exhibitor metallic stand

Metal with one side of exposure.
Easy to assemble.



Exhibitors may be fitted with products chosen by the client in collaboration with the commercial area.

Commited with the Environmental Care.
A member company of:

ecotic
RECICLANDO PARA CREAR

Certifications:



SPECIAL PRICES



Curved towel paper dispenser INOX

Dimensions
403 x 276 x 110 mm.

04007.S	04007.B	04007.W
130,00 €	129,00 €	114,00 €



Flush mounted paper hankerchief dispenser

Dimensions
167 x 302 x 65 mm

04025.B
35,30 €



Vertical toilet paper reserve zamac

Dimensions
Ø support 60 mm, 200 x 60 x 100 mm

05025.S
29,70 €



Closet with mirror door INOX AISI 304

Dimensions
700 x 800 x 130 mm

08011.B
3930 €



Chrome-plated brass hook

Dimensions
Ø 70 mm, prof. 80 mm.

09021.B
21,10 €



Stainless steel towel rail

Dimensions
Ø 155 mm, prof. 60 mm.
Base: 50 x 50 mm.

09049.S	09049.B
25,10 €	24,60 €

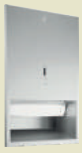

Built-in paper dispenser in stainless steel

Dimensions
762 x 438 x 110 mm

12007.S
665,00 €



Built-in compact unit with hidden paper dispenser and soap dispenser

Dimensions
337 x 438 x 108 mm

12009.S
591,00 €



Conical stainless steel wash basin to build in

Dimensions
Ø interior 360 mm, Ø exterior 402 mm, height 212 mm

13031.B
227,00 €



CIES series - Toilet paper reserve

Dimensions
175 x 56 x 75 mm

16200.B
18,20 €

SPECIAL PRICES



CIES series - Towel rail

Dimensions
65 x 495 x 70 mm

16201.B
29,60 €



CIES series - Towel rail

Dimensions
70 x 600 x 70 mm

16202.B
32,80 €



CIES series - Double towel rail

Dimensions
70 x 450 x 120 mm

16204.B
47,00 €



CIES series - Towel hoop

Dimensions
180 x 155 x 35 mm

16207.B
19,80 €



CIES series - Double towel rail

Dimensions
70 x 400 x 55 mm

16208.B
49,00 €



CIES series - Glass soap basket

Dimensions
70 x 110 x 130 mm

16212.B
17,30 €

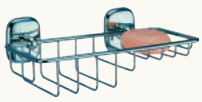

CIES series - Soap basket

Dimensions
265 x 95 x 160 mm

16213.B
81,40 €



CIES series - Hygienic paper dispenser

Dimensions
70 x 170 x 70 mm

16216.B
23,80 €



CIES series - Toilet paper roll dispenser

Dimensions
140 x 132 x 140 mm

16217.B
20,50 €



CIES series - Toilet brush zamac support

Dimensions
430 high x 140 prof. mm
Recipient Ø 112 mm

16218.B
29,60 €

SPECIAL PRICES



MEDAS series - Towel rail

Dimensions
Ø support 65 mm, bar 750 mm,
prof. 85 mm.

16303.B
29,90 €

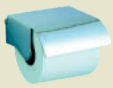

BASIC series - Hygienic paper dispenser

Dimensions
85 x 130 x 120 mm

16521.B
40,30 €



BASIC series - Toilet brush

Dimensions
85 x 130 x 120 mm

16525.B
34,00 €



BASIC series - Towel hoop

Dimensions
166 x 200 x 65 mm

16526.B
31,00 €



KUBIC series - Towel rail

Dimensions
19 x 505 x 75 mm

16530.B
40,70 €



KUBIC series - Towel rail

Dimensions
19 x 75 x 600 mm

16531.B
47,20 €



KUBIC series - Toilet paper reserve dispenser

Dimensions
32 x 145 x 80 mm

16533.B
23,10 €



KUBIC series. Glass shelf

Dimensions
19 x 510 x 137 mm

16535.B
53,35 €



KUBIC series - Towel hoop

Dimensions
180 x 183 x 163 mm

16537.B
19,55 €

CODE	DESCRIPTION	PRICE	PG
01100.B	CYCLON hand dryer push button, polish STAINLESS STEEL casing	334,00	33
01100.S	CYCLON hand dryer push button, satin STAINLESS STEEL casing	334,00	33
01100.W	CYCLON hand dryer push button, white STAINLESS STEEL casing	291,00	33
01101.B	CYCLON hand dryer automatic sensor, polish STAINLESS STEEL casing	341,00	35
01101.S	CYCLON hand dryer automatic sensor, satin STAINLESS STEEL casing	341,00	35
01101.W	CYCLON hand dryer automatic sensor, white STAINLESS STEEL casing	294,00	35
01151.B	WINDFLOWhand dryer automatic sensor, polish STAINLESS STEEL casing	375,00	31
01151.S	WINDFLOWhand dryer automatic sensor, satin STAINLESS STEEL satin casing	360,00	31
01151.W	WINDFLOWhand dryer automatic sensor, white STAINLESS STEEL casing	333,00	31
01250.B	KAI hand dryer push button, polish STAINLESS STEEL casing	198,50	41
01250.S	KAI hand dryer push button, satin STAINLESS STEEL casing	198,50	41
01250.W	KAI hand dryer push button, white STAINLESS STEEL casing	189,50	41
01251.B	KAI hand dryer automatic sensor, polish STAINLESS STEEL casing	195,00	43
01251.S	KAI hand dryer automatic sensor, satin STAINLESS STEEL casing	195,00	43
01251.W	KAI hand dryer automatic sensor, white STAINLESS STEEL casing	179,00	43
01303.AB	V-JET hand dryer Atlantic Blue	995,00	27
01303.BD	V-JET hand dryer Bordeaux color	995,00	27
01303.BK	V-JET hand dryer Black color	995,00	27
01303.CH	V-JET hand dryer Champagne color	995,00	27
01303.CR	V-JET hand dryer Cherry red color	995,00	27
01303.DB	V-JET hand dryer Deep blue color	995,00	27
01303.IAB	V-JET hand dryer Atlantic Blue, Ion Shield	1195,00	27
01303.IBD	V-JET hand dryer Bordeaux color, Ion Shield	1195,00	27
01303.IBK	V-JET hand dryer Black color, Ion Shield	1195,00	27
01303.ICH	V-JET hand dryer Champagne color, Ion Shield	1195,00	27
01303.ICR	V-JET hand dryer Cherry red color, Ion Shield	1195,00	27
01303.IDB	V-JET hand dryer Deep blue color, Ion Shield	1195,00	27
01303.IRF	V-JET hand dryer Red F1 color, Ion Shield	1195,00	27
01303.IS	V-JET hand dryer Silver grey color, Ion Shield	1135,00	27
01303.IW	V-JET hand dryer White color, Ion Shield	995,00	27
01303.RF	V-JET hand dryer Red F1 color	995,00	27
01303.S	V-JET hand dryer Silver grey color	805,00	27
01303.W	V-JET hand dryer White color	699,00	27
01304.AB	V-JET hand dryer Atlantic Blue color	1100,00	27
01304.BD	VELTIA hand dryer Bordeaux color	1100,00	27
01304.BK	VELTIA hand dryer Black color	1100,00	27
01304.CH	VELTIA hand dryer Champagne color	1100,00	27
01304.CR	VELTIA hand dryer Cherry red color	1100,00	27
01304.DB	VELTIA hand dryer Deep blue color	1100,00	27
01304.IAB	VELTIA hand dryer Atlantic Blue, Ion Shield	1300,00	27
01304.IBD	VELTIA hand dryer Bordeaux, Ion Shield	1300,00	27
01304.IBK	VELTIA hand dryer Black, Ion Shield	1300,00	27
01304.ICH	VELTIA hand dryer Champagne, Ion Shield	1300,00	27
01304.ICR	VELTIA hand dryer Cherry red, Ion Shield	1300,00	27
01304.IDB	VELTIA hand dryer Deep blue, Ion Shield	1300,00	27
01304.IRF	VELTIA hand dryer Red F1, Ion Shield	1300,00	27
01304.IS	VELTIA hand dryer Silver grey, Ion Shield	1280,00	27
01304.IW	VELTIA hand dryer White, Ion Shield	1120,00	27
01304.RF	VELTIA hand dryer Red F1 color	1100,00	27
01304.S	VELTIA hand dryer Silver grey color	1022,00	27
01304.W	VELTIA hand dryer White color	852,00	27
01305.AB	V-JET Triblade hand dryer Atlantic blue color	995,00	27
01305.BD	V-JET Triblade hand dryer Bordeaux color	995,00	27
01305.BK	V-JET Triblade hand dryer Black color	995,00	27
01305.CH	V-JET Triblade hand dryer Champagne color	995,00	27
01305.CR	V-JET Triblade hand dryer Cherry red color	995,00	27
01305.DB	V-JET Triblade hand dryer Deep blue color	995,00	27
01305.IAB	V-JET Triblade hand dryer Atlantic Blue, Ion Shield	1195,00	27
01305.IBD	V-JET Triblade hand dryer Bordeaux, Ion Shield	1195,00	27
01305.IBK	V-JET Triblade hand dryer Black, Ion Shield	1195,00	27
01305.ICH	V-JET Triblade hand dryer Champagne, Ion Shield	1195,00	27
01305.ICR	V-JET Triblade hand dryer Cherry red, Ion Shield	1195,00	27
01305.IDB	V-JET Triblade hand dryer Deep blue, Ion Shield	1195,00	27
01305.IRF	V-JET Triblade hand dryer Red F1, Ion Shield	1195,00	27
01305.IS	V-JET Triblade hand dryer Silver grey, Ion Shield	1135,00	27
01305.IW	V-JET Triblade hand dryer White, Ion Shield	995,00	27
01305.RF	V-JET Triblade hand dryer Red F1 color	995,00	27
01305.S	V-JET Triblade hand dryer Silver grey color	789,00	27
01305.W	V-JET Triblade hand dryer White color	699,00	27
01306.AB	VELTIA Triblade hand dryer Atlantic Blue	1100,00	27
01306.BD	VELTIA Triblade hand dryer Bordeaux color	1100,00	27
01306.BK	VELTIA Triblade hand dryer Black color	1100,00	27
01306.CH	VELTIA Triblade hand dryer Champagne color	1100,00	27
01306.CR	VELTIA Triblade hand dryer Cherry red color	1100,00	27
01306.DB	VELTIA Triblade hand dryer Deep blue color	1100,00	27
01306.IAB	VELTIA Triblade hand dryer Atlantic Blue color, Ion Shield	1300,00	27
01306.IBD	VELTIA Triblade hand dryer Bordeaux color, Ion Shield	1300,00	27
01306.IBK	VELTIA Triblade hand dryer Black color, Ion Shield	1300,00	27
01306.ICH	VELTIA Triblade hand dryer Champagne color, Ion Shield	1300,00	27
01306.ICR	VELTIA Triblade hand dryer Cherry red color, Ion Shield	1300,00	27
01306.IDB	VELTIA Triblade hand dryer Deep blue color, Ion Shield	1300,00	27
01306.IRF	V-JET Triblade hand dryer Red F1 color, Ion Shield	1300,00	27
01306.IS	V-JET Triblade hand dryer Silver grey color, Ion Shield	1280,00	27
01306.IW	V-JET Triblade hand dryer White color, Ion Shield	1100,00	27
01306.RF	VELTIA Triblade hand dryer Red F1 color	1100,00	27
01306.S	VELTIA Triblade hand dryer Silver grey color	1022,00	27
01306.W	VELTIA Triblade hand dryer White color	852,00	27
01450.B	BIGFLOW hand dryer, push button, polish STAINLESS STEEL casing	235,00	47
01450.S	BIGFLOW hand dryer, push button, satin STAINLESS STEEL casing	235,00	47
01450.W	BIGFLOW hand dryer, push button, white STAINLESS STEEL casing	195,00	47
01451.B	BIGFLOW hand dryer, automatic sensor, polish STAINLESS STEEL casing	235,00	49
01451.S	BIGFLOW hand dryer, automatic sensor, satin STAINLESS STEEL casing	235,00	49
01451.W	BIGFLOW hand dryer, automatic sensor, white STAINLESS STEEL casing	195,50	49
01460.W	BIGFLOW hand dryer, automatic sensor, white ABS casing	156,00	47
01461.W	BIGFLOW hand dryer, automatic sensor, white ABS casing	156,00	49
01481.B	BIGFLOW EVO hand dryer, polish STAINLESS STEEL casing	207,00	45
01481.N	BIGFLOW EVO hand dryer, black finished STAINLESS STEEL casing	380,00	45
01481 other colors	BIGFLOW EVO hand dryer, black finished STAINLESS STEEL casing	456,00	45
01481.S	BIGFLOW EVO hand dryer, satin STAINLESS STEEL casing	207,00	45
01481.W	BIGFLOW EVO hand dryer, white STAINLESS STEEL casing	170,00	45
01491.W	BIGFLOW EVO hand dryer, white ABS casing	115,00	45
01600.B	THIN hand dryer, polish STAINLESS STEEL casing	324,00	37
01600.S	THIN hand dryer, satin STAINLESS STEEL casing	324,00	37
01600.W	THIN hand dryer, white STAINLESS STEEL casing	318,00	37
01831.B	FUGA EVO hand dryer, polish STAINLESS STEEL casing	299,00	19
01831.N	FUGA EVO hand dryer, black finished STAINLESS STEEL casing	408,00	19
01831.S	FUGA EVO hand dryer, satin STAINLESS STEEL casing	295,00	19
01851.B	FUGA hand dryer, automatic sensor, polish STAINLESS STEEL casing	319,00	21
01851.S	FUGA hand dryer, automatic sensor, satin STAINLESS STEEL casing	308,00	21
01851.W	FUGA hand dryer, automatic sensor, white STAINLESS STEEL casing	265,00	21
01861.W	FUGA hand dryer, automatic sensor, white ABS casing	222,50	21
01871.BK	FUSION hand dryer, black color	CONSULT	23
01871.G	FUSION hand dryer, grey color	CONSULT	23
01871.PK	FUSION hand dryer, pink color	CONSULT	23
01871.TQ	FUSION hand dryer, turquoise color	CONSULT	23
01871.W	FUSION hand dryer, white color	CONSULT	23
01871.YL	FUSION hand dryer, yellow color	CONSULT	23
01901.BK	CONCEPT³ Hand dryer, soap dispenser and tap set on countertop. BLACK color	1641,00	15
01901.GD	CONCEPT³ hand dryer, soap dispenser and tap set on countertop. GOLD color	1779,00	15
01901.S	CONCEPT³ hand dryer, soap dispenser and tap set on countertop. SILVER color	1490,00	15
01901.T	CONCEPT³ hand dryer, soap dispenser and tap set on countertop. TITANIUM color	1641,00	15
01902.BK	CONCEPT³ hand dryer, soap dispenser and tap set on countertop, big size. BLACK color	1641,00	15
01902.GD	CONCEPT³ hand dryer, soap dispenser and tap set on countertop, big size. GOLD color	1779,00	15
01902.S	CONCEPT³ hand dryer, soap dispenser and tap set on countertop, big size. SILVER color	1490,00	15
01902.T	CONCEPT³ hand dryer, soap dispenser and tap set on countertop, big size. TITANIUM color	1641,00	15
01910.B	AIRTAP hand dryer on countertop. Polish CHROMED BRASS	870,00	80
01911.B	AIRTAP hand dryer on countertop, higher. Polish CHROMED BRASS	870,00	80
02010.W	1600 W foldable hair dryer	29,30	66
02011.W	1800 - 2200 W hair dryer	68,80	66
02012.W	1800 - 2200 W hair dryer	82,00	66
02013.B	1800 W hair dryer	58,40	65
02014.B	Hair dryer wall support holder	31,10	65
02055.G	1200 W grey ABS hair dryer	61,70	63
02055.N	1200 W black ABS hair dryer	49,70	63
02055.W	1200 W white ABS hair dryer	38,00	63
02057.B	1600 W professional hair dryer	61,00	65
02058.S	HOTEL LINE hair dryer	89,30	65

CODE	DESCRIPTION	PRICE	PG
02200.B	ZONDA hair dryer, polish finished STAINLESS STEEL casing	388,00	61
02200.S	ZONDA hair dryer, satin finished STAINLESS STEEL casing	388,00	61
02200.W	ZONDA hair dryer, white finished STAINLESS STEEL casing	348,00	61
02300.S	MANGO hair dryer	519,00	63
03001.06.B	600 ml soap dispenser	29,00	74
03001.06.S	600 ml soap dispenser	28,30	74
03001.W	1200 ml vertical white finished STAINLESS STEEL soap dispenser	56,10	72
03002.W	1200 ml STAINLESS STEEL liquid soap dispenser	56,10	75
03003.B	345 ml polish finished STAINLESS STEEL liquid soap dispenser	39,40	74
03004.B	1200 ml polish finished STAINLESS STEEL liquid soap dispenser	74,90	76
03004.S	1200 ml STAINLESS STEEL liquid soap dispenser	64,50	76
03005.B	STAINLESS STEEL liquid soap dispenser, polish finish	59,20	76
03008.W	1500 ml POLYPROPYLENE liquid soap dispenser	22,50	83
03009.W	3000 ml POLYPROPYLENE liquid soap dispenser	44,90	83
03010.BK	BLACK series liquid soap dispenser	53,40	113
03011.BK	BLACK series liquid soap dispenser	73,20	113
03012.BK	BLACK series soap foam dispenser	80,20	113
03013.ABS	500 ml ABS and POLYETHYLENE hospital soap dispenser	110,00	77
03013.AL	500 ml ALUMINIUM and POLYETHYLENE hospital soap dispenser	127,50	77
03013.S	500 ml STAINLESS STEEL and POLYETHYLENE hospital soap dispenser	135,00	77
03016.L	1000 ml ABS and POLYETHYLENE hospital soap dispenser with large lever	140,50	77
03018.W	1000 ml ABS liquid soap dispenser	30,70	83
03019.W	2000 ml ABS liquid soap dispenser	47,60	83
03022.S	820 ml STAINLESS STEEL liquid soap dispenser	52,90	74
03023.S	1200 ml STAINLESS STEEL automatic liquid soap dispenser	107,00	80
03024.B	300 ml STAINLESS STEEL liquid soap dispenser	122,50	73
03024.S	300 ml STAINLESS STEEL liquid soap dispenser	133,50	73
03025.S	300 ml STAINLSEE STEEL liquid soap dispenser	127,00	73
03032.T	Double soap dispenser 2 x 200 ml	27,00	82
03036.N	1000 ml CLASSIC series black ABS liquid soap dispenser	31,60	82
03036.W	1000 ml CLASSIC series white ABS liquid soap dispenser	16,60	82
03038.FP	Foam pump for soap dispensers - 03039.S - 03039.B - 03038.W	3,50	79
03038.TR	Transformer	13,90	79
03038.W	1000 ml automatic soap dispenser	65,00	79
03039.B	1000 ml automatic soap dispenser	115,00	79
03039.N	1000 ml automatic soap dispenser	223,49	79
03039 other colors	1000 ml automatic soap dispenser	224,00	79
03039.S	1000 ml automatic soap dispenser	109,00	79
03041.B	1200 ml STAINLESS STEEL liquid soap dispenser with inner deposit	60,50	72
03041.S	1200 ml STAINLESS STEEL liquid soap dispenser with inner deposit	50,00	72
03042.B	1200 ml STAINLESS STEEL liquid soap dispenser with inner deposit	56,70	75
03042.S	1200 ml STAINLESS STEEL liquid soap dispenser with inner deposit	53,70	75
03046.B	300 ml liquid soap dispenser	73,10	121
03050.B	1200 ml STAINLESS STEEL liquid soap dispenser with inner deposit	62,60	71
03050.N	1200 ml STAINLESS STEEL liquid soap dispenser with inner deposit	103,50	71
03050 other colors	1200 ml STAINLESS STEEL liquid soap dispenser with inner deposit	124,00	71
03050.S	1200 ml STAINLESS STEEL liquid soap dispenser with inner deposit	58,00	71
03100.B	500 ml polish finished STAINLESS STEEL liquid soap dispenser	60,60	84
03101.B	1000 ml liquid soap dispenser with ABS contailer to built-in	41,40	84
03102.S	1000 ml liquid soap dispenser with ABS contailer to built-in	84,70	84
03103.S	1000 ml liquid soap dispenser with ABS contailer to built-in	105,00	84
03106.B	1000 ml chromed BRASS liquid soap dispenser installation on countertop	379,55	80
03106.MUL.B	MULTIFEED system liquid soap dispenser	406,00	81
03107.B	1000 ml liquid soap dispenser	422,00	85
03108.DEP1	MULTIFEED system liquid soap dispenser tank	727,00	81
03108.DEP2	MULTIFEED system liquid soap dispenser tank	392,00	81
03108.DEP3	MULTIFEED system liquid soap dispenser tank	312,00	81
03201.S	1200 ml flush mounted STAINLESS STEEL liquid soap dispenser	125,00	85
03202.S	1200 ml flush mounted STAINLESS STEEL liquid soap dispenser	125,00	85
04003.W	White ABS towel paper dispenser, folded towels or roll	53,50	109
04004.2.BK	Black ABS towel paper dispenser	209,00	109
04004.2.W	White ABS towel paper dispenser	209,00	109
04005.B	Polish finished STAINLESS STEEL towel paper dispenser	52,00	105
04005.S	Satin finished STAINLESS STEEL towel paper dispenser	52,00	105
04006.B	STAINLESS STEEL towel paper dispenser	51,00	104
04006.S	STAINLESS STEEL towel paper dispenser	50,00	104
04006.W	STAINLESS STEEL towel paper dispenser	35,00	104
04008.B	Industrial towel paper roll holder	54,30	93
04009.B	Industrial towel paper roll holder	52,20	93

CODE	DESCRIPTION	PRICE	PG
04010.B	Polish finished STAINLESS STEEL towel paper dispenser	76,70	105
04010.S	Satin finished STAINLESS STEEL towel paper dispenser	76,50	105
04020.N	Black ABS CLASSIC series towel paper dispenser	44,40	105
04020.W	White ABS CLASSIC series towel paper dispenser	21,65	105
04024.B	Chromed STEEL paper handkerchief dispenser	35,90	184
04026.2.B	STAINLESS STEEL toilet paper hoops dispenser	85,80	183
04026.2.S	STAINLESS STEEL toilet paper hoops dispenser	85,80	183
04026.2.W	ABS toilet paper hoops dispenser	25,50	183
04027.BK	BLACK series paper handkerchief dispenser	43,00	115
04028.BK	BLACK series paper hoop dispenser	66,20	115
04029.BK	BLACK series hygienic bag dispenser	24,50	116
04030.BK	BLACK series bulkpack toilet paper dispenser	57,40	114
04031.BK	BLACK series towel dispenser	89,70	114
04032.2.BK	Towel paper dispenser	173,00	109
04032.2.W	Towel paper dispenser	173,00	109
04032.BK	BLACK series auto-cut towel paper dispenser	300,00	115
04033.BK	BLACK series electronic towel paper dispenser	312,00	115
04035.REC.S	Satin finished AISI 304 STAINLESS STEEL semi-recessed towel paper dispenser	556,00	108
04035.S	STAINLESS STEEL towel paper dispenser	441,00	108
04046.B	STAINLESS STEEL towel paper dispenser	65,20	103
04046.N	STAINLESS STEEL towel paper dispenser	137,50	103
04046 other colors	STAINLESS STEEL towel paper dispenser	165,00	103
04046.S	STAINLESS STEEL towel paper dispenser	64,80	103
04049.B.2	Chromed ABS hygienic bag dispenser	11,70	184
04050.B	Polish finished STAINLESS STEEL hygienic bag dispenser	20,90	184
04050.S	Satin finished STAINLESS STEEL hygienic bag dispenser	20,90	184
04098.B	Polish finished STAINLESS STEEL center-pull towel paper roll dispenser	120,90	106
04098.MINI.B	Polish finished STAINLESS STEEL center-pull towel paper mini-roll dispenser	86,50	106
04098.MINI.S	Satin finished STAINLESS STEEL center-pull towel paper mini-roll dispenser	86,50	106
04098.S	Satin finished STAINLESS STEEL center-pull towel paper roll dispenser	124,00	106
04098.W	Polish finished STAINLESS STEEL center-pull towel paper roll dispenser	112,00	106
04099.B	Polish finished STAINLESS STEEL center-pull towel paper roll dispenser	133,00	106
04099.MINI.B	Polish finished STAINLESS STEEL center-pull towel paper mini-roll dispenser	110,00	106
04099.MINI.S	Satin finished STAINLESS STEEL center-pull towel paper mini-roll dispenser	110,00	106
04099.S	Satin finished STAINLESS STEEL center-pull towel paper roll dispenser	133,00	106
04101.T	ABS center-pull towel paper roll dispenser	53,00	107
04108.MINI.N	Black ABS CLASSIC series center-pull towel paper mini-roll dispenser	39,20	107
04108.MINI.W	White ABS CLASSIC series center-pull towel paper mini-roll dispenser	17,85	107
04108.N	Black ABS CLASSIC series center-pull towel paper roll dispenser	54,30	107
04108.W	White ABS CLASSIC series center-pull towel paper roll dispenser	27,80	107
05001.B	Polish finished STAINLESS STEEL industrial toilet paper roll dispenser	45,50	90
05001.S	Satin finished STAINLESS STEEL industrial toilet paper roll dispenser	43,50	90
05001.W	White finished STEEL industrial toilet paper roll dispenser	41,40	90
05001.XL.B	Polish finished STAINLESS STEEL extra-large industrial toilet paper roll dispenser	57,20	90
05001.XL.S	Satin finished STAINLESS STEEL extra-large industrial toilet paper roll dispenser	54,10	90
05001.XL.W	White finished STEEL extra-large industrial toilet paper roll dispenser	51,00	90
05002.W	ABS double toilet paper roll dispenser	62,60	91
05004.N	Black ABS CLASSIC series toilet paper dispenser	41,60	91
05004.W	White ABS CLASSIC series toilet paper dispenser	19,30	91
05005.N	Black ABS CLASSIC series extra-large toilet paper dispenser	43,20	91
05005.W	White ABS CLASSIC series extra-large toilet paper dispenser	19,90	91
05006.B	STAINLESS STEEL toilet paper dispenser	42,50	89
05006.S	STAINLESS STEEL toilet paper dispenser	42,50	89
05006.W	Toilet paper dispenser (material?)	32,00	89
05007.B	Polish finished STAINLESS STEEL toilet paper dispenser	43,20	95
05007.S	STAINLESS STEEL toilet paper dispenser	43,20	95
05008.B	Polish finished STAINLESS STEEL double toilet paper dispenser	66,60	96
05010.BK	BLACK series industrial toilet paper dispenser	86,10	113
05011.B	Chromed STEEL toilet paper dispenser	16,00	95
05011.BK	BLACK series extra-large industrial toilet paper dispenser	93,30	114
05012.B	Chromed STEEL double toilet paper dispenser	24,00	96
05012.BK	BLACK series toilet paper dispenser	49,10	114
05013.B	Polish finished STAINLESS STEEL toilet paper dispenser	14,05	163
05013.S	STAINLESS STEEL toilet paper dispenser	15,10	163
05015.S	STAINLESS STEEL double toilet paper dispenser	77,30	96
05018.B	Polish finished STAINLESS STEEL toilet paper dispenser	22,35	95
05018.S	STAINLESS STEEL toilet paper dispenser	23,65	95
05023.S	STAILESS STEEL toilet paper dispenser	17,40	95
05046.B	STAILESS STEEL toilet paper dispenser	55,70	89
05046.N	STAILESS STEEL toilet paper dispenser	132,50	89

CODE	DESCRIPTION	PRICE	PG
05046 other colors	STAILESS STEEL toilet paper dispenser	159,00	89
05046.S	STAILESS STEEL toilet paper dispenser	52,20	89
05099.W	White ABS double toilet paper dispenser	44,50	96
05100.B	Polish finished STAINLESS STEEL triple toilet paper dispenser	83,90	99
05100.S	STAINLESS STEEL triple toilet paper dispenser	83,90	99
05100.W	White finished STEEL triple toilet paper dispenser	62,40	99
05101.B	Polish finished STAINLESS STEEL double toilet paper dispenser	56,70	99
05101.S	STAINLESS STEEL double toilet paper dispenser	52,30	99
05101.W	White finished STEEL double toilet paper dispenser	56,70	99
05103.B	Polish finished STAINLESS STEEL toilet paper dispenser	81,40	92
05103.S	Satin finished STAINLESS STEEL toilet paper dispenser	82,50	92
05103.W	White finished STEEL toilet paper dispenser	68,90	92
05104.B	Polish finished STAINLESS STEEL extra-large toilet paper dispenser	90,50	92
05104.S	Satin finished STAINLESS STEEL extra-large toilet paper dispenser	92,10	92
05104.W	White finished STEEL extra-large toilet paper dispenser	74,70	92
05105.B	Polish finished STAINLESS STEEL quadruple toilet paper dispenser	106,00	99
05105.S	Satin finished STAINLESS STEEL quadruple toilet paper dispenser	106,00	99
05107.S	Satin finished STAINLESS STEEL bulkpack toilet paper dispenser	78,30	101
05108.B	Polish finished STAINLESS STEEL bulkpack toilet paper dispenser	137,00	101
05108.S	Satin finished STAINLESS STEEL bulkpack toilet paper dispenser	137,00	101
05118.N	Black ABS CLASSIC series bulkpack toilet paper dispenser	39,20	101
05118.W	White ABS CLASSIC series bulkpack toilet paper dispenser	26,50	101
05202.S	Satin finished STAINLESS STEEL flush mounted double toilet paper dispenser	113,50	97
05203.B	Polish finished STAINLESS STEEL flush mounted double toilet paper dispenser	37,50	97
05203.S	Satin finished STAINLESS STEEL flush mounted toilet paper dispenser	37,50	97
05204.B	Polish finished STAINLESS STEEL flush mounted double toilet paper dispenser	29,10	97
05204.S	Satin finished STAINLESS STEEL flush mounted toilet paper dispenser	29,00	97
05206.B	Polish finished STAINLESS STEEL flush mounted double toilet paper dispenser	45,00	97
06016.2.K	Air freshener	10,20	329
06019.3	Insect killer replacement tube	25,90	328
06020.08	Insect killer replacement tube	8,87	328
06020.15	Insect killer replacement tube	19,00	328
06020.20	Insect killer replacement tube	34,20	328
06020.40	Insect killer replacement tube	34,40	328
06025.K	Foam soap cartridge	11,00	113
06028.B	Waterless valve for urinal	102,50	202
06030.K	17030.W air freshener refill	23,00	329
06045.FIX	Bathroom accessories fixing adhesive	10,10	133
06050.K	Auto-sanitizer refill	28,70	329
07000.B	Self-closing faucet installation on countertop	77,20	318
07001.B	Self-closing faucet wall mounted installation	81,10	318
07002.B	Self-closing faucet installation on countertop	117,00	318
07002M	Self-closing mixer installation on countertop	237,50	318
07003.B	Self-closing faucet installation on countertop	82,70	319
07003M	Self-closing mixer installation on countertop	155,50	319
07004.B	Lever operated self-closing faucet	116,00	319
07008.B	Wall mounted spout	52,10	320
07009.B	Spout for washbasin. Installed on countertop	91,70	320
07010.B	Wall mounted spout	47,30	320
07011.10.B	Vandal-proof spout	101,50	229
07013.K	Vandal-proof self-closing faucet	122,00	228
07014.B	Faucet kit for toilet pan and washbasin combi 13123 and 13124	1160,00	231
07015.10.B	Vandal-proof self-closing faucet installation through wall	273,00	228
07016.10.B	Vandal-proof flushometer installation through wall	314,00	228
07017.2.10.B	Vandal-proof self-closing mixer installation through wall	379,00	228
07052.B	Flush mounted self-closing faucet with push button for urinal	94,80	320
07060.B	Flush mounted push button self-closing shower faucet	94,80	322
07061.B	Surface mounted push button self-closing shower faucet	100,00	322
07062.B	Flush mounted push button self-closing shower mixer	302,00	322
07063.B	Push button self-closing shower faucet and head combination. Tube 850 mm	218,00	323
07064.B	Push button self-closing shower mixer and head combination. Tube 850 mm	466,00	323
07069.B	Lever operated thermostatic self-closing mixer	462,00	322
07071.B	Wall mounted vandal proof shower head	79,70	323
07074.2.B	Wall mounted shower head	112,00	323
07075.10.B	Vandal-proof shower head	149,50	229
07076.1.B	Flush mounted self-closing 1" flushometer	185,50	321
07076.34.B	Flush mounted self-closing 3/4" flushometer	181,50	321
07078.1.B	Self-closing 1" flushometer	186,50	321
07078.B	Self-closing 3/4" flushometer	174,50	321
07079.B	Wall mounted self-closing 3/4" flushometer	136,00	321

CODE	DESCRIPTION	PRICE	PG
07080.K	Self-closing vandal-proof flushometer Water inlet 3/4''with shut-off valve	153,50	229
07081.K	Self-closing vandal-proof flushometer Water inlet 3/4''without shut-off valve	113,00	229
07082.B	Self-closing flushometer. Water inlet 3/4''. With shut-off valve. Flush mounted installation	306,00	229
07083.B	Self-closing flushometer. Water inlet 3/4''. Without shut-off valve. Flush mounted installation	306,00	229
07084.10.B	Vandal-proof push button installation through wall	130,50	228
07085.10.B	Vandal-proof push button installation through wall	130,50	228
07086.B	Flush connection external Ø 28 mm	72,40	321
07090.B	Self-closing tap with STAINLESS STEEL box	1276,00	228
07091.B	Urinal flushometer	162,00	321
07092.B	WC flushometer	162,00	321
07100.B	Professional sink faucet - Basic faucet. Installation on countertop.	776,00	325
07101.B	Professional sink faucet - Basic faucet. Installation on countertop	358,00	325
07102.B	Professional sink faucet - Cold / hot water faucet. Installation on countertop	477,00	325
07102.CC	Professional sink faucet - Cold / hot water faucet with one extra spout. Installation on countertop	635,00	325
07102M.CC	Professional sink faucet - Lever operated mixer with one extra spout. Wall mounted installation	876,00	325
07103.B	Professional sink faucet - Swivel spout. Water inlet 3/4"	73,90	325
07106.B	One pedal floor settled faucet	178,00	324
07107.B	One pedal floor settled progressive mixer	263,00	324
07108.B	Two pedals floor settled mixer	266,00	324
07112.B	Foot operated push button faucet. Flush mounted installation	141,00	324
07200.B	Lever operated mixer. Instalación on countertop	45,60	294
07201.B	Lever operated mixer. Instalación on countertop	241,00	295
07250.B	Automatic faucet on countertop	557,50	80
08003.B	Magnifying mirror	153,00	190
08004.B	Extendable mirror	54,40	191
08005.B	Extendable mirror	81,80	191
08006.B	Extendable mirror	133,00	190
08007.B	Extensible magnifying mirror with two faces. Normal vision and x2	31,70	190
08009.2.B	Extensible magnyfying mirror with two faces: normal vision and x5.	67,60	191
08012.B	Chromed ABS adjustable height mirror	53,90	190
08015.B	Extensible magnyfying mirror x3	125,00	191
08023.B	70x50 cm reclining mirror for disabled with polish finished AISI 304 STAINLESS STEEL frame	238,50	298
08023.S	70x50 cm reclining mirror for disabled with satin finished AISI 304 STAINLESS STEEL frame	238,50	298
08023.W	70x50 cm reclining mirror for disabled with white finished AISI 304 STAINLESS STEEL frame	178,50	298
08024.B	80x60 cm reclining mirror for disabled with polish finished AISI 304 STAINLESS STEEL frame	238,50	298
08024.S	80x60 cm reclining mirror for disabled with satin finished AISI 304 STAINLESS STEEL frame	238,50	298
08024.W	80x60 cm reclining mirror for disabled with white finished AISI 304 STAINLESS STEEL frame	178,50	298
08025.N36	NYLON series - Mirror	258,00	285
08025.W	ALUMINIUM-NYLON reclining mirror for disabled	352,00	299
08026.W	White ABS frame, STAINLESS STEEL support	104,00	299
08050.6.B	60x45 cm mirror with polish finished AISI 304 STAINLESS STEEL frame	308,00	192
08050.6.S	60x45 cm mirror with satin finished AISI 304 STAINLESS STEEL frame	308,00	192
08050.6.W	60x45 cm mirror with white finished AISI 304 STAINLESS STEEL frame	308,00	192
08050.B	60x45 cm mirror with polish finished AISI 304 STAINLESS STEEL frame	155,00	192
08050.S	60x45 cm mirror with satin finished AISI 304 STAINLESS STEEL frame	155,00	192
08050.W	60x45 cm mirror with white finished AISI 304 STAINLESS STEEL frame	155,00	192
08051.6.B	70x50 cm mirror with polish finished AISI 304 STAINLESS STEEL frame	330,00	192
08051.6.S	70x50 cm mirror with satin finished AISI 304 STAINLESS STEEL frame	330,00	192
08051.6.W	70x50 cm mirror with white finished AISI 304 STAINLESS STEEL frame	330,00	192
08051.B	70x50 cm mirror with polish finished AISI 304 STAINLESS STEEL frame	156,00	192
08051.S	70x50 cm mirror with satin finished AISI 304 STAINLESS STEEL frame	156,00	192
08051.W	70x50 cm mirror with white finished AISI 304 STAINLESS STEEL frame	156,00	192
08052.6.B	80x60 cm mirror with polish finished AISI 304 STAINLESS STEEL frame	392,00	192
08052.6.S	80x60 cm mirror with satin finished AISI 304 STAINLESS STEEL frame	392,00	192
08052.6.W	80x60 cm mirror with white finished AISI 304 STAINLESS STEEL frame	392,00	192
08052.B	80x60 cm mirror with polish finished AISI 304 STAINLESS STEEL frame	156,00	192
08052.S	80x60 cm mirror with satin finished AISI 304 STAINLESS STEEL frame	156,00	192
08052.W	80x60 cm mirror with white finished AISI 304 STAINLESS STEEL frame	156,00	192
08053.S	Adapted mirror with satin finished AISI 304 STAINLESS STEEL frame	255,00	299
08071.B	70x50 cm especial polish finished AISI 304 STAINLESS STEEL vandalproof mirror	124,00	226
09002.S	Satin finished STAINLESS STEEL hygienic bin	83,30	260
09004.S	Satin finished STAINLESS STEEL hygienic bin	65,60	260
09007.2.W	White ABS hygienic bin	49,50	260
09008.S	Trim Ring for countertop trash bin satin finished STAINLESS STEEL	62,60	260

CODE	DESCRIPTION	PRICE	PG
09009.S	Trim Ring with lid for countertop trash bin satin finished STAINLESS STEEL	31,90	260
09013.P.S	Vandal-proof hook	58,60	226
09013.R.S	Vandal-proof hook	34,80	226
09015.S	CLASSIC series - satin finished STAINLESS STEEL hook	9,10	163
09016.85.B	Individual hook	12,80	162
09016.85.S	Individual hook	12,80	162
09016.B	CLASSIC series - STAINLESS STEEL hook	11,35	162
09016.S	CLASSIC series - satin finished STAINLESS STEEL hook	10,90	162
09017.B	CLASSIC series - STAINLESS STEEL hook	12,40	162
09017.S	CLASSIC series - satin finished STAINLESS STEEL hook	12,20	162
09018.B	CLASSIC series - polish finished STAINLESS STEEL hook	13,40	162
09018.S	CLASSIC series - satin finished STAINLESS STEEL hook	13,40	162
09019.B	CLASSIC series - polish finished STAINLESS STEEL hook	22,30	163
09019.S	CLASSIC series - satin finished STAINLESS STEEL hook	23,35	163
09023.B	CLASSIC series - polish finished STAINLESS STEEL towel shelf with lower bar	82,20	160
09023.S	CLASSIC series - satin finished STAINLESS STEEL towel shelf with lower bar	72,80	160
09024.B	CLASSIC series - polish finished STAINLESS STEEL towel shelf	57,50	159
09025.B	CLASSIC series - polish finished STAINLESS STEEL towel rail	38,60	159
09026.B	CLASSIC series - polish finished STAINLESS STEEL towel rail	58,90	159
09027.B	CLASSIC series - polish finished STAINLESS STEEL towel rail	33,50	158
09027.S	CLASSIC series - satin finished STAINLESS STEEL towel rail	37,20	158
09028.B	CLASSIC series - polish finished STAINLESS STEEL towel rail	37,50	158
09028.S	CLASSIC series - satin finished STAINLESS STEEL towel rail	38,10	158
09030.B	CLASSIC series - 450 mm polish finished STAINLESS STEEL towel rail	34,90	158
09030.S	CLASSIC series - 450 mm satin finished STAINLESS STEEL towel rail	34,90	158
09031.B	CLASSIC series - 600 mm polish finished STAINLESS STEEL towel rail	36,40	158
09031.S	CLASSIC series - 600 mm satin finished STAINLESS STEEL towel rail	36,40	158
09033.B	CLASSIC series - 450 mm polish finished STAINLESS STEEL towel shelf	55,20	159
09034.B	CLASSIC series - 600 mm polish finished STAINLESS STEEL towel shelf	51,80	159
09036.B	CLASSIC series - 600 mm polish finished STAINLESS STEEL towel shelf with lower bar	59,30	160
09036.S	CLASSIC series - 600 mm satin finished STAINLESS STEEL towel shelf with lower bar	58,00	160
09037.B	CLASSIC series - polish finished STAINLESS STEEL built-in soap dish	31,50	161
09038.B	CLASSIC series - polish finished STAINLESS STEEL built-in soap dish	27,80	161
09039.183.B	Curtain rod	55,70	188
09039.230.A	Curtain rod	74,20	188
09040.152.B	Curtain rod	74,20	188
09042.B	Curtain rod	88,90	188
09043.B	Ring for shower curtain	12,80	189
09044.B	CLASSIC series - polish finished STAINLESS STEEL soap dish	15,10	161
09044.S	CLASSIC series - satin finished STAINLESS STEEL soap dish	15,10	161
09045.B	CLASSIC series - polish finished STAINLESS STEEL towel rail with soap dish	26,00	161
09046.B	CLASSIC series - polish finished STAINLESS STEEL handle with soap dish	57,90	160
09046.SJ.B	CLASSIC series - polish finished STAINLESS STEEL handle	44,00	160
09047.B	CLASSIC series - polish finished STAINLESS STEEL towel hoop	17,70	158
09047.S	CLASSIC series - satin finished STAINLESS STEEL towel hoop	17,70	158
09048.B	CLASSIC series - 450 mm polish finished STAINLESS STEEL utility shelf	59,10	158
09048.S	CLASSIC series - 450 mm satin finished STAINLESS STEEL utility shelf	59,10	158
09051.106.V	Shower curtain - 1830 x 1065 mm	18,60	189
09051.178.V	Shower curtain - 1830 x 1780 mm	22,00	189
09052.B	Chromed BRASS soap basket	33,60	180
09053.B	Chromed BRASS soap basket	67,60	180
09054.B	Chromed BRASS soap basket	40,80	180
09055.B	Chromed BRASS soap basket	23,90	180
09056.B	Polish finished STAINLESS STEEL soap basket	28,70	180
09057.B	Polish finished STAINLESS STEEL soap basket	69,10	181
09058.B	CLASSIC series - polish finished STAINLESS STEEL clothes line	23,40	163
09059.B	CLASSIC series - polish finished STAINLESS STEEL toilet brush	27,05	164
09059.S	CLASSIC series - satin finished STAINLESS STEEL toilet brush	27,65	164
09062.B	Polish finished STAINLESS STEEL soap basket	40,60	181
09063.B	Polish finished STAINLESS STEEL corner soap basket	45,80	181
09063.S	Satin finished STAINLESS STEEL corner soap basket	47,00	181
09064.B	Polish finished STAINLESS STEEL soap basket	33,80	181
09064.S	Satin finished STAINLESS STEEL soap basket	40,00	181
09065.B	Polish finished STAINLESS STEEL soap basket	64,20	181
09071.B	Polish finish STAINLESS STEEL toilet brush	33,10	186
09071.S	Satin finished STAINLESS STEEL toilet brush	33,10	186
09073.B	Polish finished STAINLESS STEEL toilet brush	37,10	186
09073.S	Satin finished STAINLESS STEEL toilet brush	39,40	186
09074.B	Polish finished STAINLESS STEEL toilet brush	46,40	186
09074.S	Satin finished STAINLESS STEEL toilet brush	46,40	186
09075.B	Polish finished STAINLESS STEEL toilet brush	41,80	187
09075.S	Satin finished STAINLESS STEEL toilet brush	41,80	187
09076.S	Satin finished STAINLESS STEEL toilet brush	41,80	187
09077.B	Polish finished STAINLESS STEEL toilet brush	37,10	187
09077.S	Satin finished STAINLESS STEEL toilet brush	37,10	187
09100.B	Polish finished STAINLESS STEEL bin 3 l	20,80	253
09100.S	Satin finished STAINLESS STEEL bin 3 l	23,50	253
09100.W	White finished STEEL bin 3 l	21,85	253
09101.B	Polish finished STAINLESS STEEL bin 5 l	26,00	253
09101.S	Satin finished STAINLESS STEEL bin 5 l	31,20	253
09101.W	White finished STEEL bin 5 l	29,10	253
09102.B	Polish finished STAINLESS STEEL bin 12 l	37,50	253
09102.S	Satin finished STAINLESS STEEL bin 12 l	43,70	253
09102.W	White finished STEEL bin 12 l	41,60	253
09103.B	Polish finished STAINLESS STEEL bin 20 l	68,70	253
09103.S	Satin finished STAINLESS STEEL bin 20 l	68,70	253
09103.W	White finished STEEL bin 20 l	79,20	253
09104.B	Polish finished STAINLESS STEEL bin 30 l	76,70	253
09104.S	Satin finished STAINLESS STEEL bin 30 l	80,10	253
09104.W	White finished STEEL bin 30 l	97,30	253
09107.W	CLASSIC series - White ABS toilet brush	7,05	164
09108.BK	BLACK series - self standing toilet brush	89,40	116
09109.BK	BLACK series - wall mounted toilet brush with chromed support	60,00	116
09110.B	Polish finished STAINLESS STEEL bin 12 l	52,70	253
09110.S	Satin finished STAINLESS STEEL bin 12 l	50,70	253
09200.2.S	Buit-in baby chanching unit	1380,00	315
09203.2.S	Baby chanching unit	1380,00	315
09206.S	STAINLESS STEEL horizontal wall mounted baby changing unit	2800,00	314
09209.W	POLYETHYLENE horizontal wall mounted baby changing unit	396,50	314
09211.W	POLYETHYLENE wall mounted baby chair	164,50	314
09213.W	Horizontal baby chanching unit	362,00	315
09214.S	Horizontal baby chanching unit	835,00	315
09215.W	Vertical baby changing unit	409,00	314
10002.S	AISI 304 STAINLESS STEEL cold water fountain 50L/h	1285,00	310
10004.S	AISI 304 STAINLESS STEEL cold water fountain 25L/h	1095,00	310
10005.K	Anti-chlorine filter container	154,50	311
10007.K	Anti-chlorine filter	115,00	311
10008.B	Push button tap for fountain	79,90	311
10010.K	Plastic cup dispenser	33,60	311
10023.S	Water fountain with jet faucet	328,00	311
10071.B	Faucet for glass refills	72,80	311
10080.S	Wall mounted cold water fountain 30L/h	1245,00	310
11160.060.E	STAINLESS STEEL sink with frame and shelf	1173,00	234
11160.060.F	STAINLESS STEEL sink	451,00	234
11160.060.K	STAINLESS STEEL sink withe frame	990,00	234
11160.070.E	STAINLESS STEEL sink with frame and shelf	1264,00	234
11160.070.F	STAINLESS STEEL sink	628,00	234
11160.070.K	STAINLESS STEEL sink with frame	1081,00	234
11170.070.E	STAINLESS STEEL sink with frame and shelf	1383,00	234
11170.070.F	STAINLESS STEEL sink	647,00	234
11170.070.K	STAINLESS STEEL sink with frame	1168,00	234
11170.080.E	STAINLESS STEEL sink with frame and shelf	1669,00	234
11170.080.F	STAINLESS STEEL sink	677,00	234
11170.080.K	STAINLESS STEEL sink with frame	1427,00	234
11170.100.E	STAINLESS STEEL sink with frame and shelf	2090,00	234
11170.100.F	STAINLESS STEEL sink	1155,00	234
11170.100.K	STAINLESS STEEL sink with frame	1795,00	234
11170.120.E	STAINLESS STEEL sink with frame and shelf	2432,00	234
11170.120.F	STAINLESS STEEL sink	1296,00	234
11170.120.K	STAINLESS STEEL sink with frame	2086,00	234
11170.140.E	STAINLESS STEEL sink with frame and shelf	2542,00	234
11170.140.F	STAINLESS STEEL sink	1435,00	234
11170.140.K	STAINLESS STEEL sink with frame	2156,00	234
11260.100.E	STAINLESS STEEL sink with frame and shelf	1778,00	234
11260.100.F	STAINLESS STEEL sink	894,00	234
11260.100.K	STAINLESS STEEL sink with frame	1497,00	234
11260.120.E	STAINLESS STEEL sink with frame and shelf	1865,00	234
11260.120.F	STAINLESS STEEL sink	936,00	234
11260.120.K	STAINLESS STEEL sink with frame	1555,00	234

CODE	DESCRIPTION	PRICE	PG
11260.130.E	STAINLESS STEEL sink with frame and shelf	2109,00	234
11260.130.F	STAINLESS STEEL sink	1180,00	234
11260.130.K	STAINLESS STEEL sink with frame	1771,00	234
11270.100.E	STAINLESS STEEL sink with frame and shelf	2020,00	234
11270.100.F	STAINLESS STEEL sink	950,00	234
11270.100.K	STAINLESS STEEL sink with frame	1725,00	234
11270.120.E	STAINLESS STEEL sink with frame and shelf	2160,00	234
11270.120.F	STAINLESS STEEL sink	1041,00	234
11270.120.K	STAINLESS STEEL sink with frame	1814,00	234
11270.140.E	STAINLESS STEEL sink with frame and shelf	2712,00	234
11270.140.F	STAINLESS STEEL sink	1172,00	234
11270.140.K	STAINLESS STEEL sink with frame	2325,00	234
11270.180.E	STAINLESS STEEL sink with frame and shelf	2994,00	234
11270.180.F	STAINLESS STEEL sink	1890,00	234
11270.180.K	STAINLESS STEEL sink with frame	2497,00	234
112L50.080.E	STAINLESS STEEL sink with frame and shelf	734,00	234
112L50.080.F	STAINLESS STEEL sink	216,00	234
112L50.080.K	STAINLESS STEEL sink with frame	593,00	234
112L50.100.E	STAINLESS STEEL sink with frame and shelf	792,00	234
112L50.100.F	STAINLESS STEEL sink	266,00	234
112L50.100.K	STAINLESS STEEL sink with frame	648,00	234
112L55.100.E	STAINLESS STEEL sink with frame and shelf	1082,00	234
112L55.100.F	STAINLESS STEEL sink with frame and shelf	531,00	234
112L55.100.K	STAINLESS STEEL sink with frame	864,00	234
112L55.120.E	STAINLESS STEEL SINK	1205,00	234
112L55.120.F	STAINLESS STEEL sink	595,00	234
112L55.120.K	STAINLESS STEEL sink with frame	969,00	234
112L55.140.E	STAINLESS STEEL sink	1443,00	234
112L55.140.F	STAINLESS STEEL sink	783,00	234
112L55.140.K	STAINLESS STEEL sink with frame	1216,00	234
112L60.100.E	STAINLESS STEEL sink with frame and shelf	1440,00	234
112L60.100.F	STAINLESS STEEL sink	631,00	234
112L60.100.K	STAINLESS STEEL sink with frame	1160,00	234
112L60.120.E	STAINLESS STEEL sink with frame and shelf	1387,00	234
112L60.120.F	STAINLESS STEEL sink	542,00	234
112L60.120.K	STAINLESS STEEL sink with frame	1077,00	234
112L60.130.E	STAINLESS STEEL sink with frame and shelf	1727,00	234
112L60.130.F	STAINLESS STEEL sink	791,00	234
112L60.130.K	STAINLESS STEEL sink with frame	1389,00	234
112L60.140.E	STAINLESS STEEL sink with frame and shelf	1909,00	234
112L60.140.F	STAINLESS STEEL sink	751,00	234
112L60.140.K	STAINLESS STEEL sink with frame	1550,00	234
112L70.100.E	STAINLESS STEEL sink with frame and shelf	1663,00	234
112L70.100.F	STAINLESS STEEL sink	681,00	234
112L70.100.K	STAINLESS STEEL sink with frame	1368,00	234
112L70.120.E	STAINLESS STEEL sink with frame and shelf	1612,00	234
112L70.120.F	STAINLESS STEEL sink	635,00	234
112L70.120.K	STAINLESS STEEL sink with frame	1266,00	234
112L70.130.E	STAINLESS STEEL sink with frame and shelf	1909,00	234
112L70.130.F	STAINLESS STEEL sink	850,00	234
112L70.130.K	STAINLESS STEEL sink with frame	1546,00	234
112L70.140.E	STAINLESS STEEL sink with frame and shelf	2043,00	234
112L70.140.F	STAINLESS STEEL sink	800,00	234
112L70.140.K	STAINLESS STEEL sink with frame	1657,00	234
112L70.160.E	STAINLESS STEEL sink with frame and shelf	2718,00	234
112L70.160.F	STAINLESS STEEL sink	1501,00	234
112L70.160.K	STAINLESS STEEL sink with frame	2253,00	234
112L70.180.E	STAINLESS STEEL sink with frame and shelf	2886,00	234
112L70.180.F	STAINLESS STEEL sink	1670,00	234
112L70.180.K	STAINLESS STEEL sink with frame	2389,00	234
112L70.200.E	STAINLESS STEEL sink with frame and shelf	3120,00	234
112L70.200.F	STAINLESS STEEL sink	1948,00	234
112L70.200.K	STAINLESS STEEL sink with frame	2589,00	234
112R50.080.E	STAINLESS STEEL sink with frame	734,00	234
112R50.080.F	STAINLESS STEEL sink	216,00	234
112R50.080.K	STAINLESS STEEL sink with frame	593,00	234
112R50.100.E	STAINLESS STEEL sink with frame	792,00	234
112R50.100.F	STAINLESS STEEL sink	266,00	234
112R50.100.K	STAINLESS STEEL sink with frame	648,00	234
112R55.100.E	STAINLESS STEEL sink with frame	1082,00	234
112R55.100.F	STAINLESS STEEL sink	531,00	234
112R55.100.K	STAINLESS STEEL sink with frame	864,00	234
112R55.120.E	STAINLESS STEEL sink with frame	1205,00	234
112R55.120.F	STAINLESS STEEL sink	595,00	234
112R55.120.K	STAINLESS STEEL sink with frame	969,00	234
112R55.140.E	STAINLESS STEEL sink with frame	1443,00	234
112R55.140.F	STAINLESS STEEL sink	783,00	234
112R55.140.K	STAINLESS STEEL sink with frame	1216,00	234
112R60.100.E	STAINLESS STEEL sink with frame and shelf	1440,00	234
112R60.100.F	STAINLESS STEEL sink	631,00	234
112R60.100.K	STAINLESS STEEL sink with frame	1160,00	234
112R60.120.E	STAINLESS STEEL sink with frame and shelf	1387,00	234
112R60.120.F	STAINLESS STEEL sink	542,00	234
112R60.120.K	STAINLESS STEEL sink with frame	1077,00	234
112R60.130.E	STAINLESS STEEL sink with frame and shelf	1727,00	234
112R60.130.F	STAINLESS STEEL sink	791,00	234
112R60.130.K	STAINLESS STEEL sink with frame	1389,00	234
112R60.140.E	STAINLESS STEEL sink with frame and shelf	1909,00	234
112R60.140.F	STAINLESS STEEL sink	751,00	234
112R60.140.K	STAINLESS STEEL sink with frame	1550,00	234
112R70.100.E	STAINLESS STEEL sink with frame and shelf	1663,00	234
112R70.100.F	STAINLESS STEEL sink	681,00	234
112R70.100.K	STAINLESS STEEL sink with frame	1368,00	234
112R70.120.E	STAINLESS STEEL sink with frame and shelf	1612,00	234
112R70.120.F	STAINLESS STEEL sink	635,00	234
112R70.120.K	STAINLESS STEEL sink with frame	1266,00	234
112R70.130.E	STAINLESS STEEL sink with frame and shelf	1909,00	234
112R70.130.F	STAINLESS STEEL sink	850,00	234
112R70.130.K	STAINLESS STEEL sink with frame	1546,00	234
112R70.140.E	STAINLESS STEEL sink with frame and shelf	2043,00	234
112R70.140.F	STAINLESS STEEL sink	800,00	234
112R70.140.K	STAINLESS STEEL sink with frame	1657,00	234
112R70.160.E	STAINLESS STEEL sink with frame and shelf	2718,00	234
112R70.160.F	STAINLESS STEEL sink	1501,00	234
112R70.160.K	STAINLESS STEEL sink with frame	2253,00	234
112R70.180.E	STAINLESS STEEL sink with frame and shelf	2886,00	234
112R70.180.F	STAINLESS STEEL sink	1670,00	234
112R70.180.K	STAINLESS STEEL sink with frame	2389,00	234
112R70.200.E	STAINLESS STEEL sink with frame and shelf	3120,00	234
112R70.200.F	STAINLESS STEEL sink	1948,00	234
112R70.200.K	STAINLESS STEEL sink with frame	2589,00	234
11370.180.E	STAINLESS STEEL sink with frame and shelf	3221,00	235
11370.180.F	STAINLESS STEEL sink	1554,00	235
11370.180.K	STAINLESS STEEL sink with frame	2725,00	235
113L50.120.E	STAINLESS STEEEL sink	934,00	235
113L50.120.F	STAINLESS STEEL sink	364,00	235
113L50.120.K	STAINLESS STEEL sink with frame	737,00	235
113L50.135.E	STAINLESS STEEL sink with frame	996,00	235
113L50.135.F	STAINLESS STEEL sink	396,00	235
113L50.135.K	STAINLESS STEEL sink with frame	783,00	235
113L60.140.E	STAINLESS STEEL sink with frame and shelf	2009,00	235
113L60.140.F	STAINLESS STEEL sink	936,00	235
113L60.140.K	STAINLESS STEEL sink with frame	1650,00	235
113L60.160.E	STAINLESS STEEL sink with frame and shelf	2215,00	235
113L60.160.F	STAINLESS STEEL sink	1024,00	235
113L60.160.K	STAINLESS STEEL sink with frame	1759,00	235
113L60.180.E	STAINLESS STEEL sink with frame and shelf	2379,00	235
113L60.180.F	STAINLESS STEEL sink	1114,00	235
113L60.180.K	STAINLESS Steel sink with frame	1916,00	235
113L60.200.E	STAINLESS Steel sink with frame	2201,00	235
113L60.200.F	STAINLESS STEEL sink	1154,00	235
113L60.200.K	STAINLESS STEEL sink with frame	1753,00	235
113L70.160.E	STAINLESS STEEL sink with frame and shelf	2474,00	235
113L70.160.F	STAINLESS STEEL sink	1076,00	235
113L70.160.K	STAINLESS STEEL sink with frame	2009,00	235
113L70.180.E	STAINLESS STEEL sink with frame and shelf	2648,00	235
113L70.180.F	STAINLESS STEEL sink	1224,00	235
113L70.180.K	STAINLESS STEEL sink with frame	2151,00	235
113L70.200.E	STAINLESS STEEL sink with frame	2405,00	235
113L70.200.F	STAINLESS STEEL sink	1324,00	235

CODE	DESCRIPTION	PRICE	PG
113L70.200.K	STAINLESS STEEL sink with frame	1958,00	235
113R50.120.E	STAINLESS STEEL sink with frame	934,00	235
113R50.120.F	STAINLESS STEEL sink	364,00	235
113R50.120.K	STAINLESS STEEL sink with frame	737,00	235
113R50.135.E	STAINLESS STEEL sink with frame	996,00	235
113R50.135.F	STAINLESS STEEL sink	396,00	235
113R50.135.K	STAINLESS STEEL sink with frame	783,00	235
113R60.140.E	STAINLESS STEEL sink with frame and shelf	2009,00	235
113R60.140.F	STAINLESS STEEL sink	936,00	235
113R60.140.K	STAINLESS STEEL sink with frame	1650,00	235
113R60.160.E	STAINLESS STEEL sink with frame and shelf	2215,00	235
113R60.160.F	STAINLESS STEEL sink	1024,00	235
113R60.160.K	STAINLESS STEEL sink with frame	1759,00	235
113R60.180.E	STAINLESS STEEL sink with frame and shelf	2379,00	235
113R60.180.F	STAINLESS STEEL sink	1114,00	235
113R60.180.K	STAINLESS STEEL sink with frame	1916,00	235
113R60.200.E	STAINLESS STEEL sink with frame	2201,00	235
113R60.200.F	STAINLESS STEEL sink	1154,00	235
113R60.200.K	STAINLESS STEEL sink with frame	1753,00	235
113R70.160.E	STAINLESS STEEL sink with frame and shelf	2474,00	235
113R70.160.F	STAINLESS STEEL sink	1076,00	235
113R70.160.K	STAINLESS STEEL sink with frame	2009,00	235
113R70.180.E	STAINLESS STEEL sink with frame and shelf	2648,00	235
113R70.180.F	STAINLESS STEEL sink	1224,00	235
113R70.180.K	STAINLESS STEEL sink with frame	2151,00	235
113R70.200.E	STAINLESS STEEL sink with frame	2405,00	235
113R70.200.F	STAINLESS STEEL sink	1324,00	235
113R70.200.K	STAINLESS STEEL sink with frame	1958,00	235
11460.200.E	STAINLESS STEEL sink with frame and shelf	2661,00	235
11460.200.F	STAINLESS STEEL sink	1154,00	235
11460.200.K	STAINLESS STEEL sink with frame	2181,00	235
11470.220.E	STAINLESS STEEL sink with frame	2554,00	235
11470.220.F	STAINLESS STEEL sink	1390,00	235
11470.220.K	STAINLESS STEEL sink with frame	2091,00	235
114S55L.120.E	STAINLESS STEEL sink furniture with frame and opening for dishwasher	1100,00	239
114S55L.120.K	STAINLESS STEEL sink furniture with frame and opening for dishwasher	958,00	239
114S55L.140.E	STAINLESS STEEL sink furniture with frame and opening for dishwasher	1377,00	239
114S55L.140.K	STAINLESS STEEL sink furniture with frame and opening for dishwasher	1204,00	239
114S55R.120.E	STAINLESS STEEL sink furniture with frame and opening for dishwasher	1100,00	239
114S55R.120.K	STAINLESS STEEL sink furniture with frame and opening for dishwasher	958,00	239
114S55R.140.E	STAINLESS STEEL sink furniture with frame and opening for dishwasher	1377,00	239
114S55R.140.K	STAINLESS STEEL sink furniture with frame and opening for dishwasher	1204,00	239
114S60L.120.E	STAINLESS STEEL sink furniture with frame and opening for dishwasher	1046,00	239
114S60L.120.K	STAINLESS STEEL sink furniture with frame and opening for dishwasher	877,00	239
114S60L.140.E	STAINLESS STEEL sink furniture with frame and opening for dishwasher	1393,00	239
114S60L.140.K	STAINLESS STEEL sink furniture with frame and opening for dishwasher	1182,00	239
114S60L2.180.E	STAINLESS STEEL sink furniture with frame and opening for dishwasher	1940,00	239
114S60L2.180.K	STAINLESS STEEL sink furniture with frame and opening for dishwasher	1714,00	239
114S60R.120.E	STAINLESS STEEL sink furniture with frame and opening for dishwasher	1046,00	239
114S60R.120.K	STAINLESS STEEL sink furniture with frame and opening for dishwasher	877,00	239
114S60R.140.E	STAINLESS STEEL sink furniture with frame and opening for dishwasher	1393,00	239
114S60R.140.K	STAINLESS STEEL sink furniture with frame and opening for dishwasher	1182,00	239
114S60R2.180.E	STAINLESS STEEL sink furniture with frame and opening for dishwasher	1940,00	239
114S60R2.180.K	STAINLESS STEEL sink furniture with frame and opening for dishwasher	1714,00	239
114S70L.120.E	STAINLESS STEEL sink furniture with frame and opening for dishwasher	1191,00	239
114S70L.120.K	STAINLESS STEEL sink furniture with frame and opening for dishwasher	1022,00	239
114S70L.140.E	STAINLESS STEEL sink furniture with frame and opening for dishwasher	1496,00	239
114S70L.140.K	STAINLESS STEEL sink furniture with frame and opening for dishwasher	1233,00	239
114S70L2.180.E	STAINLESS STEEL sink furniture with frame and opening for dishwasher	2155,00	239
114S70L2.180.K	STAINLESS STEEL sink furniture with frame and opening for dishwasher	1795,00	239
114S70R.120.E	STAINLESS STEEL sink furniture with frame and opening for dishwasher	1191,00	239
114S70R.120.K	STAINLESS STEEL sink furniture with frame and opening for dishwasher	1022,00	239
114S70R.140.E	STAINLESS STEEL sink furniture with frame and opening for dishwasher	1496,00	239
114S70R.140.K	STAINLESS STEEL sink furniture with frame and opening for dishwasher	1233,00	239
114S70R2.180.E	STAINLESS STEEL sink furniture with frame and opening for dishwasher	2155,00	239
114S70R2.180.K	STAINLESS STEEL sink furniture with frame and opening for dishwasher	1795,00	239
114V50L.100.K	STAINLESS STEEL sink furniture with frame and opening for dishwasher	1221,00	239
114V50L.135.K	STAINLESS STEEL sink furniture with frame and opening for dishwasher	1589,00	239
114V50R.100.K	STAINLESS STEEL sink furniture with frame and opening for dishwasher	1221,00	239
114V50R.135.K	STAINLESS STEEL sink furniture with frame and opening for dishwasher	1589,00	239

CODE	DESCRIPTION	PRICE	PG
114V55L.120.K	STAINLESS STEEL sink furniture with frame and opening for dishwasher	1750,00	239
114V55L.140.K	STAINLESS STEEL sink furniture with frame and opening for dishwasher	1992,00	239
114V55R.120.K	STAINLESS STEEL sink furniture with frame and opening for dishwasher	1750,00	239
114V55R.140.K	STAINLESS STEEL sink furniture with frame and opening for dishwasher	1992,00	239
114V60L.120.K	STAINLESS STEEL sink furniture with frame and opening for dishwasher	2071,00	239
114V60L.140.K	STAINLESS STEEL sink furniture with frame and opening for dishwasher	2025,00	239
114V60L2.180.K	STAINLESS STEEL sink furniture with frame and opening for dishwasher	2379,00	239
114V60R.120.K	STAINLESS STEEL sink furniture with frame and opening for dishwasher	2071,00	239
114V60R.140.K	STAINLESS STEEL sink furniture with frame and opening for dishwasher	2025,00	239
114V60R2.180.K	STAINLESS STEEL sink furniture with frame and opening for dishwasher	2379,00	239
114V70L.120.K	STAINLESS STEEL sink furniture with frame and opening for dishwasher	1601,00	239
114V70L.140.K	STAINLESS STEEL sink furniture with frame and opening for dishwasher	2060,00	239
114V70L2.180.K	STAINLESS STEEL sink furniture with frame and opening for dishwasher	2565,00	239
114V70R.120.K	STAINLESS STEEL sink furniture with frame and opening for dishwasher	1601,00	239
114V70R.140.K	STAINLESS STEEL sink furniture with frame and opening for dishwasher	2060,00	239
114V70R2.180.K	STAINLESS STEEL sink furniture with frame and opening for dishwasher	2565,00	239
114Z55L.100.K	STAINLESS STEEL special furniture	1661,00	238
114Z55L.120.K	STAINLESS STEEL special furniture	1768,00	238
114Z55L.140.K	STAINLESS STEEL special furniture	1890,00	238
114Z55R.100.K	STAINLESS STEEL special furniture	1661,00	238
114Z55R.120.K	STAINLESS STEEL special furniture	1768,00	238
114Z55R.140.K	STAINLESS STEEL special furniture	1890,00	238
114Z60.060.K	STAINLESS STEEL special furniture	1383,00	238
114Z60L.100.K	STAINLESS STEEL special furniture	1840,00	238
114Z60L.120.K	STAINLESS STEEL special furniture	1862,00	238
114Z60L.140.K	STAINLESS STEEL special furniture	2131,00	238
114Z60L2.140.K	STAINLESS STEEL special furniture	2235,00	238
114Z60L2.160.K	STAINLESS STEEL special furniture	2390,00	238
114Z60L2.180.K	STAINLESS STEEL special furniture	2665,00	238
114Z60R.100.K	STAINLESS STEEL special furniture	1840,00	238
114Z60R.120.K	STAINLESS STEEL special furniture	1862,00	238
114Z60R.140.K	STAINLESS STEEL special furniture	2131,00	238
114Z60R2.140.K	STAINLESS STEEL special furniture	2235,00	238
114Z60R2.160.K	STAINLESS STEEL special furniture	2390,00	238
114Z60R2.180.K	STAINLESS STEEL special furniture	2665,00	238
114Z60X.100.K	STAINLESS STEEL special furniture	2067,00	238
114Z60X.120.K	STAINLESS STEEL special furniture	2195,00	238
114Z60X2.200.K	STAINLESS STEEL special furniture	2810,00	238
114Z70.060.K	STAINLESS STEEL special furniture	1776,00	238
114Z70L.100.K	STAINLESS STEEL special furniture	1930,00	238
114Z70L.120.K	STAINLESS STEEL special furniture	2036,00	238
114Z70L.130.K	STAINLESS STEEL special furniture	2224,00	238
114Z70L.140.K	STAINLESS STEEL special furniture	2235,00	238
114Z70L2.160.K	STAINLESS STEEL special furniture	2579,00	238
114Z70L2.180.K	STAINLESS STEEL special furniture	2768,00	238
114Z70R.100.K	STAINLESS STEEL special furniture	1930,00	238
114Z70R.120.K	STAINLESS STEEL special furniture	5088,00	238
114Z70R.130.K	STAINLESS STEEL special furniture	2224,00	238
114Z70R.140.K	STAINLESS STEEL special furniture	2235,00	238
114Z70R2.160.K	STAINLESS STEEL special furniture	2579,00	238
114Z70R2.180.K	STAINLESS STEEL special furniture	2768,00	238
114Z70R2.200.K	STAINLESS STEEL special furniture	3169,00	238
114Z70X.100.K	STAINLESS STEEL special furniture	2166,00	238
114Z70X.120.K	STAINLESS STEEL special furniture	2387,00	238
114Z70X.140.K	STAINLESS STEEL special furniture	2544,00	238
114Z70X3.180.K	STAINLESS STEEL special furniture	3069,00	238
11508.S	STAINLESS STEEL drawer , large capacity	374,00	241
11509.60.S	STAINLESS STEEL 3 drawers module for table dept 700 mm	1111,00	241
11509.70.S	STAINLESS STEEL 3 drawers module for table dept 600 mm	1162,00	241
11510.S	Pack 4 wheels for table	493,00	241
11527.S	STAINLESS STEEL table	980,00	241
11530.S	STAINLESS STEEL cleaners sink	1081,00	241
11532.K	Trim ring for waste bin hole	68,00	243
11550.060.E	STAINLESS STEEL industrial table	675,00	236
11550.060.K	STAINLESS STEEL industrial table	637,00	236
11550.080.E	STAINLESS STEEL industrial table	711,00	236
11550.080.K	STAINLESS STEEL industrial table	650,00	236
11550.100.E	STAINLESS STEEL industrial table	728,00	236
11550.100.K	STAINLESS STEEL industrial table	691,00	236
11550.120.E	STAINLESS STEEL industrial table	756,00	236

CODE	DESCRIPTION	PRICE	PG
11550.120.K	STAINLESS STEEL industrial table	720,00	236
11550.140.E	STAINLESS STEEL industrial table	820,00	236
11550.140.K	STAINLESS STEEL industrial table	773,00	236
11550.150.E	STAINLESS STEEL industrial table	856,00	236
11550.150.K	STAINLESS STEEL industrial table	805,00	236
11550.160.E	STAINLESS STEEL industrial table	875,00	236
11550.160.K	STAINLESS STEEL industrial table	827,00	236
11550.180.E	STAINLESS STEEL industrial table	972,00	236
11550.180.K	STAINLESS STEEL industrial table	911,00	236
11550.200.E	STAINLESS STEEL industrial table	1028,00	236
11550.200.K	STAINLESS STEEL industrial table	972,00	236
11550.220.E	STAINLESS STEEL industrial table	1297,00	236
11550.220.K	STAINLESS STEEL industrial table	1241,00	236
11550.240.E	STAINLESS STEEL industrial table	1355,00	236
11550.240.K	STAINLESS STEEL industrial table	1297,00	236
11555.060.E	STAINLESS STEEL industrial table	733,00	236
11555.060.K	STAINLESS STEEL industrial table	675,00	236
11555.080.E	STAINLESS STEEL industrial table	781,00	236
11555.080.K	STAINLESS STEEL industrial table	731,00	236
11555.100.E	STAINLESS STEEL industrial table	803,00	236
11555.100.K	STAINLESS STEEL industrial table	761,00	236
11555.120.E	STAINLESS STEEL industrial table	833,00	236
11555.120.K	STAINLESS STEEL industrial table	781,00	236
11555.140.E	STAINLESS STEEL industrial table	902,00	236
11555.140.K	STAINLESS STEEL industrial table	850,00	236
11555.150.E	STAINLESS STEEL industrial table	969,00	236
11555.150.K	STAINLESS STEEL industrial table	906,00	236
11555.160.E	STAINLESS STEEL industrial table	1030,00	236
11555.160.K	STAINLESS STEEL industrial table	963,00	236
11555.180.E	STAINLESS STEEL industrial table	1092,00	236
11555.180.K	STAINLESS STEEL industrial table	1018,00	236
11555.200.E	STAINLESS STEEL industrial table	1154,00	236
11555.200.K	STAINLESS STEEL industrial table	1074,00	236
11555.220.E	STAINLESS STEEL industrial table	1405,00	236
11555.220.K	STAINLESS STEEL industrial table	1343,00	236
11555.240.E	STAINLESS STEEL industrial table	1467,00	236
11555.240.K	STAINLESS STEEL industrial table	1399,00	236
11560.060.E	STAINLESS STEEL wall mounted table with backsplash	1399,00	236
11560.060.K	STAINLESS STEEL wall mounted table with backsplash	759,00	236
11560.080.E	STAINLESS STEEL wall mounted table with backsplash	817,00	236
11560.080.K	STAINLESS STEEL wall mounted table with backsplash	778,00	236
11560.100.E	STAINLESS STEEL wall mounted table with backsplash	840,00	236
11560.100.K	STAINLESS STEEL wall mounted table with backsplash	805,00	236
11560.100.S	Counter with shelf	1235,00	243
11560.120.E	STAINLESS STEEL wall mounted table with backsplash	871,00	236
11560.120.K	STAINLESS STEEL wall mounted table with backsplash	840,00	236
11560.140.E	STAINLESS STEEL wall mounted table with backsplash	908,00	236
11560.140.K	STAINLESS STEEL wall mounted table with backsplash	908,00	236
11560.150.E	STAINLESS STEEL wall mounted table with backsplash	987,00	236
11560.150.K	STAINLESS STEEL wall mounted table with backsplash	935,00	236
11560.160.E	STAINLESS STEEL wall mounted table with backsplash	967,00	236
11560.160.K	STAINLESS STEEL wall mounted table with backsplash	954,00	236
11560.180.E	STAINLESS STEEL wall mounted table with backsplash	1122,00	236
11560.180.K	STAINLESS STEEL wall mounted table with backsplash	1027,00	236
11560.200.E	STAINLESS STEEL wall mounted table with backsplash	1168,00	236
11560.200.K	STAINLESS STEEL wall mounted table with backsplash	1151,00	236
11560.220.E	STAINLESS STEEL wall mounted table with backsplash	1450,00	236
11560.220.K	STAINLESS STEEL wall mounted table with backsplash	1341,00	236
11560.240.E	STAINLESS STEEL wall mounted table with backsplash	1482,00	236
11560.240.K	STAINLESS STEEL wall mounted table with backsplash	1425,00	236
11570.060.E	STAINLESS STEEL wall mounted table with backsplash	790,00	236
11570.060.K	STAINLESS STEEL wall mounted table with backsplash	739,00	236
11570.080.E	STAINLESS STEEL wall mounted table with backsplash	813,00	236
11570.080.K	STAINLESS STEEL wall mounted table with backsplash	788,00	236
11570.100.E	STAINLESS STEEL wall mounted table with backsplash	962,00	236
11570.100.K	STAINLESS STEEL wall mounted table with backsplash	915,00	236
11570.120.E	STAINLESS STEEL wall mounted table with backsplash	952,00	236
11570.120.K	STAINLESS STEEL wall mounted table with backsplash	884,00	236
11570.140.E	STAINLESS STEEL wall mounted table with backsplash	1018,00	236
11570.140.K	STAINLESS STEEL wall mounted table with backsplash	1008,00	236

CODE	DESCRIPTION	PRICE	PG
11570.150.E	STAINLESS STEEL wall mounted table with backsplash	1118,00	236
11570.150.K	STAINLESS STEEL wall mounted table with backsplash	997,00	236
11570.160.E	STAINLESS STEEL wall mounted table with backsplash	1130,00	236
11570.160.K	STAINLESS STEEL wall mounted table with backsplash	1049,00	236
11570.180.E	STAINLESS STEEL wall mounted table with backsplash	1273,00	236
11570.180.K	STAINLESS STEEL wall mounted table with backsplash	1141,00	236
11570.200.E	STAINLESS STEEL wall mounted table with backsplash	1392,00	236
11570.200.K	STAINLESS STEEL wall mounted table with backsplash	1300,00	236
11570.220.E	STAINLESS STEEL wall mounted table with backsplash	1558,00	236
11570.220.K	STAINLESS STEEL wall mounted table with backsplash	1431,00	236
11570.240.E	STAINLESS STEEL wall mounted table with backsplash	1589,00	236
11570.240.K	STAINLESS STEEL wall mounted table with backsplash	1466,00	236
115A60.080.E	STAINLESS STEEL wall mounted low table	923,00	236
115A60.100.E	STAINLESS STEEL wall mounted low table	950,00	236
115A60.120.E	STAINLESS STEEL wall mounted low table	985,00	236
115A60.140.E	STAINLESS STEEL wall mounted low table	1068,00	236
115A60.160.E	STAINLESS STEEL wall mounted low table	1137,00	236
115A70.080.E	STAINLESS STEEL wall mounted low table	956,00	236
115A70.100.E	STAINLESS STEEL wall mounted low table	1027,00	236
115A70.120.E	STAINLESS STEEL wall mounted low table	1112,00	236
115A70.140.E	STAINLESS STEEL wall mounted low table	1195,00	236
115A70.160.E	STAINLESS STEEL wall mounted low table	1276,00	236
115L60.120.E	STAINLESS STEEL chef table with shelf	1201,00	238
115L60.120.K	STAINLESS STEEL chef table	1047,00	238
115L60.140.E	STAINLESS STEEL chef table with shelf	1346,00	238
115L60.140.K	STAINLESS STEEL chef table	1137,00	238
115L60.160.E	STAINLESS STEEL chef table with shelf	1433,00	238
115L60.160.K	STAINLESS STEEL chef table	1207,00	238
115L60.180.E	STAINLESS STEEL chef table with shelf	1500,00	238
115L60.180.K	STAINLESS STEEL chef table	1318,00	238
115L70.120.E	STAINLESS STEEL chef table with shelf	1490,00	238
115L70.120.K	STAINLESS STEEL chef table	1327,00	238
115L70.140.E	STAINLESS STEEL chef table with shelf	1542,00	238
115L70.140.K	STAINLESS STEEL chef table	1380,00	238
115L70.160.E	STAINLESS STEEL chef table with shelf	1626,00	238
115L70.160.K	STAINLESS STEEL chef table	1450,00	238
115L70.180.E	STAINLESS STEEL chef table with shelf	1810,00	238
115L70.180.K	STAINLESS STEEL chef table	1569,00	238
115R60.120.E	STAINLESS STEEL chef table with backsplash and shelf	1201,00	238
115R60.120.K	STAINLESS STEEL chef table	1047,00	238
115R60.140.E	STAINLESS STEEL chef table with backsplash and shelf	1346,00	238
115R60.140.K	STAINLESS STEEL chef table with backsplash	1137,00	238
115R60.160.E	STAINLESS STEEL chef table with backsplash and shelf	1433,00	238
115R60.160.K	STAINLESS STEEL chef table	1207,00	238
115R60.180.E	STAINLESS STEEL chef table with backsplash and shelf	1500,00	238
115R60.180.K	STAINLESS STEEL chef table with backsplash	1318,00	238
115R70.120.E	STAINLESS STEEL chef table with backsplash and shelf	1490,00	238
115R70.120.K	STAINLESS STEEL chef table with backsplash	1209,00	238
115R70.140.E	STAINLESS STEEL chef table with backsplash and shelf	1542,00	238
115R70.140.K	STAINLESS STEEL chef table with backsplash	1380,00	238
115R70.160.E	STAINLESS STEEL chef table with backsplash and shelf	1626,00	238
115R70.160.K	STAINLESS STEEL chef table with backsplash	1450,00	238
115R70.180.E	STAINLESS STEEL chef table with backsplash and shelf	1810,00	238
115R70.180.K	STAINLESS STEEL chef table with backsplash	1529,00	238
115Y60.E	STAINLESS STEEL corner table with backsplash	1191,00	236
115Y70.E	STAINLESS STEEL 90° angled table with backsplash	1305,00	236
115Z40.100.S	Wall cabinet with sliding door and dish rack	1445,00	243
11650.060.E	STAINLESS STEEL industrial table	699,00	237
11650.060.K	STAINLESS STEEL industrial table	633,00	237
11650.080.E	STAINLESS STEEL industrial table	697,00	237
11650.080.K	STAINLESS STEEL industrial table	657,00	237
11650.100.E	STAINLESS STEEL industrial table	717,00	237
11650.100.K	STAINLESS STEEL industrial table	675,00	237
11650.120.E	STAINLESS STEEL industrial table	737,00	237
11650.120.K	STAINLESS STEEL industrial table	701,00	237
11650.140.E	STAINLESS STEEL industrial table	811,00	237
11650.140.K	STAINLESS STEEL industrial table	769,00	237
11650.150.E	STAINLESS STEEL industrial table	841,00	237
11650.150.K	STAINLESS STEEL industrial table	795,00	237
11650.160.E	STAINLESS STEEL industrial table	856,00	237

CODE	DESCRIPTION	PRICE	PG
11650.160.K	STAINLESS STEEL industrial table	825,00	237
11650.180.E	STAINLESS STEEL industrial table	941,00	237
11650.180.K	STAINLESS STEEL industrial table	884,00	237
11650.200.E	STAINLESS STEEL industrial table	1002,00	237
11650.200.K	STAINLESS STEEL industrial table	947,00	237
11650.220.E	STAINLESS STEEL industrial table	1271,00	237
11650.220.K	STAINLESS STEEL industrial table	1216,00	237
11650.240.E	STAINLESS STEEL industrial table	1332,00	237
11650.240.K	STAINLESS STEEL industrial table	1276,00	237
11655.060.E	STAINLESS STEEL industrial table	733,00	237
11655.060.K	STAINLESS STEEL industrial table	675,00	237
11655.080.E	STAINLESS STEEL industrial table	781,00	237
11655.080.K	STAINLESS STEEL industrial table	731,00	237
11655.100.E	STAINLESS STEEL industrial table	803,00	237
11655.100.K	STAINLESS STEEL industrial table	761,00	237
11655.120.E	STAINLESS STEEL industrial table	833,00	237
11655.120.K	STAINLESS STEEL industrial table	781,00	237
11655.140.E	STAINLESS STEEL industrial table	902,00	237
11655.140.K	STAINLESS STEEL industrial table	850,00	237
11655.150.E	STAINLESS STEEL industrial table	969,00	237
11655.150.K	STAINLESS STEEL industrial table	906,00	237
11655.160.E	STAINLESS STEEL industrial table	1030,00	237
11655.160.K	STAINLESS STEEL industrial table	963,00	237
11655.180.E	STAINLESS STEEL industrial table	1092,00	237
11655.180.K	STAINLESS STEEL industrial table	1018,00	237
11655.200.E	STAINLESS STEEL industrial table	1154,00	237
11655.200.K	STAINLESS STEEL industrial table	1074,00	237
11655.220.E	STAINLESS STEEL industrial table	1405,00	237
11655.220.K	STAINLESS STEEL industrial table	1343,00	237
11655.240.E	STAINLESS STEEL industrial table	1467,00	237
11655.240.K	STAINLESS STEEL industrial table	1399,00	237
11660.060.E	STAINLESS STEEL central table with shelf	771,00	237
11660.060.K	STAINLESS STEEL central table	748,00	237
11660.080.E	STAINLESS STEEL central table with shelf	802,00	237
11660.080.K	STAINLESS STEEL central table	763,00	237
11660.100.E	STAINLESS STEEL central table with shelf	825,00	237
11660.100.K	STAINLESS STEEL central table	782,00	237
11660.120.E	STAINLESS STEEL central table with shelf	848,00	237
11660.120.K	STAINLESS STEEL central table	813,00	237
11660.140.E	STAINLESS STEEL central table with shelf	933,00	237
11660.140.K	STAINLESS STEEL central table	879,00	237
11660.150.E	STAINLESS STEEL central table with shelf	930,00	237
11660.150.K	STAINLESS STEEL central table	860,00	237
11660.160.E	STAINLESS STEEL central table with shelf	949,00	237
11660.160.K	STAINLESS STEEL central table	899,00	237
11660.180.E	STAINLESS STEEL central table with shelf	1101,00	237
11660.180.K	STAINLESS STEEL central table	1035,00	237
11660.200.E	STAINLESS STEEL central table with shelf	1164,00	237
11660.200.K	STAINLESS STEEL central table	1091,00	237
11660.220.E	STAINLESS STEEL central table with shelf	1369,00	237
11660.220.K	STAINLESS STEEL central table	1268,00	237
11660.240.E	STAINLESS STEEL central table with shelf	1408,00	237
11660.240.K	STAINLESS STEEL central table	1342,00	237
11670.060.E	STAINLESS STEEL central table with shelf	775,00	237
11670.060.K	STAINLESS STEEL central table	738,00	237
11670.080.E	STAINLESS STEEL central table with shelf	823,00	237
11670.080.K	STAINLESS STEEL central table	765,00	237
11670.100.E	STAINLESS STEEL central table with shelf	871,00	237
11670.100.K	STAINLESS STEEL central table	815,00	237
11670.120.E	STAINLESS STEEL central table with shelf	865,00	237
11670.120.K	STAINLESS STEEL central table	810,00	237
11670.140.E	STAINLESS STEEL central table with shelf	1045,00	237
11670.140.K	STAINLESS STEEL central table	952,00	237
11670.150.E	STAINLESS STEEL central table with shelf	1060,00	237
11670.150.K	STAINLESS STEEL central table	971,00	237
11670.160.E	STAINLESS STEEL central table with shelf	1080,00	237
11670.160.K	STAINLESS STEEL central table	987,00	237
11670.180.E	STAINLESS STEEL central table with shelf	1247,00	237
11670.180.K	STAINLESS STEEL central table	1105,00	237
11670.200.E	STAINLESS STEEL central table with shelf	1305,00	237

CODE	DESCRIPTION	PRICE	PG
11670.200.K	STAINLESS STEEL central table	1203,00	237
11670.220.E	STAINLESS STEEL central table with shelf	1469,00	237
11670.220.K	STAINLESS STEEL central table	1394,00	237
11670.240.E	STAINLESS STEEL central table with shelf	1527,00	237
11670.240.K	STAINLESS STEEL central table	1454,00	237
11680.100.E	STAINLESS STEEL central table with shelf	993,00	237
11680.120.E	STAINLESS STEEL central table with shelf	1014,00	237
11680.140.E	STAINLESS STEEL central table with shelf	1176,00	237
11680.160.E	STAINLESS STEEL central table with shelf	1215,00	237
11680.180.E	STAINLESS STEEL central table with shelf	1423,00	237
11680.200.E	STAINLESS STEEL central table with shelf	1466,00	237
116A60.080.E	STAINLESS STEEL low central table with shelf	906,00	237
116A60.100.E	STAINLESS STEEL low central table with shelf	933,00	237
116A60.120.E	STAINLESS STEEL low central table with shelf	958,00	237
116A60.140.E	STAINLESS STEEL low central table with shelf	1054,00	237
116A60.160.E	STAINLESS STEEL low central table with shelf	1114,00	237
116A70.080.E	STAINLESS STEEL low central table with shelf	929,00	237
116A70.100.E	STAINLESS STEEL low central table with shelf	985,00	237
116A70.120.E	STAINLESS STEEL low central table with shelf	1018,00	237
116A70.140.E	STAINLESS STEEL low central table with shelf	1180,00	237
116A70.160.E	STAINLESS STEEL low central table with shelf	1220,00	237
12001.S	STAINLESS STEEL flush mounted bin	263,00	244
12008.P.S	STAINLESS STEEL flush mounted furniture	371,00	246
12010.S	STAINLESS STEEL flush mounted furniture	833,00	247
12012.ADO.S	STAINLESS STEEL flush mounted furniture	296,00	242
12012.S	STAINLESS STEEL flush mounted furniture	534,00	242
12017.ADO.S	STAINLESS STEEL surface mounted kit	310,00	52
12017.HD.S	STAINLESS STEEL embedded handdryer	463,00	51
12017.P.S	STAINLESS STEEL flush mounted furniture	1005,00	51
12019.HD.S	STAINLESS STEEL embedded handdryer	520,00	52
12019.P.S	STAINLESS STEEL flush mounted furniture	1018,00	52
12020.ADO.P.S	STAINLESS STEEL surface mounted kit	290,50	244
12020.ADO.S	STAINLESS STEEL surface mounted kit	288,00	243
12020.P.S	STAINLESS STEEL flush mounted furniture	804,00	244
12020.S	STAINLESS STEEL flush mounted furniture	871,00	243
12021.ADO.S	STAINLESS STEEL surface mounted kit	290,50	243
12021.S	STAINLESS STEEL flush mounted furniture	765,00	243
12029.S	STAINLESS STEEL flush mounted furniture	212,00	247
12031.S	STAINLESS STEEL flush mounted furniture	786,00	246
12035.S	STAINLESS STEEL flush mounted furniture	637,00	246
12041.S	STAINLESS STEEL flush mounted furniture	586,00	247
12047.ADO.P.S	STAINLESS STEEL surface mounted kit	146,50	245
12047.ADO.S	STAINLESS STEEL surface mounted kit	146,50	245
12047.P.S	STAINLESS STEEL flush mounted furniture	411,00	245
12047.S	STAINLESS STEEL flush mounted furniture	412,00	245
12053.FMS	Multifunction compact unit	1688,00	53
12053.FS	Multifunction compact unit	911,00	53
12053.FTS	Multifunction compact unit	1456,00	53
12053.MS	Multifunction compact unit	1408,00	53
12053.TS	Multifunction compact unit	1176,00	53
12054.FMS	Multifunction compact unit	2778,00	53
12054.FS	Multifunction compact unit	2001,00	53
12054.FTS	Multifunction compact unit	2546,00	53
12054.MS	Multifunction compact unit	2499,00	53
12054.TS	Multifunction compact unit	2267,00	53
13001.B	AISI 304 STAINLESS STEEL urinal	653,00	202
13001.S	AISI 304 STAINLESS STEEL urinal	653,00	202
13002.B	AISI 304 STAINLESS STEEL urinal	653,00	202
13002.S	AISI 304 STAINLESS STEEL urinal	628,00	202
13003.12.S	AISI 304 STAINLESS STEEL collective urinal 1200 mm	1353,00	203
13003.18.S	AISI 304 STAINLESS STEEL collective urinal 1800 mm	1490,00	203
13003.24.S	AISI 304 STAINLESS STEEL collective urinal 2400 mm	1534,00	203
13004.70.B	Polish finished AISI 304 STAINLESS STEEL waterless urinal	774,00	202
13004.70.S	Satin finished AISI 304 STAINLESS STEEL waterless urinal	797,00	202
13004.B	AISI 304 STAINLESS STEEL urinal	605,00	202
13004.P.S	Satin finished AISI 304 STAINLESS STEEL vandal-proof urinal	826,00	226
13004.S	AISI 304 STAINLESS STEEL urinal	605,00	202
13006.S	AISI 304 STAINLESS STEEL urinal	353,00	203
13007.S	AISI 304 STAINLESS STEEL urinal divider	638,00	203
13008.S	AISI 304 STAINLESS STEEL urinal divider	474,00	203

CODE	DESCRIPTION	PRICE	PG
13009.S	STAINLESS STEEL wall-hung bidet	1159,00	200
13012.B	AISI 304 STAINLESS STEEL floor setteld toilet pan	830,00	196
13012.M.B	AISI 304 STAINLESS STEEL floor setteld adapted toilet pan	1230,00	197
13012.M.S	AISI 304 STAINLESS STEEL floor setteld adapted toilet pan	1230,00	197
13012.P.S	AISI 304 STAINLESS STEEL floor setteld vandal-proof toilet pan	1022,00	227
13012.PM.S	AISI 304 STAINLESS STEEL floor setteld adapted and vandal-proof toilet pan	1346,00	227
13012.S	AISI 304 STAINLESS STEEL floor setteld toilet pan	831,00	196
13013.B	AISI 304 STAINLESS STEEL floor setteld toilet pan	995,00	196
13013.S	AISI 304 STAINLESS STEEL floor setteld toilet pan	995,00	196
13014.B	AISI 304 STAINLESS STEEL floor setteld toilet pan for children	1635,00	200
13014.S	AISI 304 STAINLESS STEEL floor setteld toilet pan for children	1471,00	200
13016.B	AISI 304 STAINLESS STEEL floor setteld toilet pan with cistern	1767,00	200
13016.S	AISI 304 STAINLESS STEEL floor setteld toilet pan with cistern	1767,00	200
13018.B	AISI 304 STAINLESS STEEL wall-hung toilet pan	899,00	197
13018.S	AISI 304 STAINLESS STEEL wall-hung toilet pan	869,00	197
13021.B	AISI 304 STAINLESS STEEL squat pan	324,80	201
13022.GR	AISI 304 STAINLESS STEEL squat pan	553,00	201
13022.SH	AISI 304 STAINLESS STEEL squat pan	405,00	201
13023.B	AISI 304 STAINLESS STEEL squat pan	352,00	201
13024.2.S	AISI 304 STAINLESS STEEL washbasin	418,00	210
13025.B	AISI 304 STAINLESS STEEL washbasin	444,00	222
13026.B	AISI 304 STAINLESS STEEL washbasin	590,00	222
13027.B	AISI 304 STAINLESS STEEL washbasin	438,00	222
13028.B	Polish finished AISI 304 STAINLESS STEEL washbasin Ø305 on countertop	56,70	208
13028.B.PLANA	Polish finished AISI 304 STAINLESS STEEL washbasin Ø305 under countertop	56,70	209
13028.RB	Polish finished AISI 304 STAINLESS STEEL washbasin Ø305 on countertop with overflow	59,30	208
13028. RB.PLANA	Polish finished AISI 304 STAINLESS STEEL washbasin Ø305 under countertop with overflow	59,30	209
13028.RS	Satin finished AISI 304 STAINLESS STEEL washbasin Ø305 on countertop with overflow	67,10	208
13028. RS.PLANA	Satin finished AISI 304 STAINLESS STEEL washbasin Ø305 under countertop with overflow	67,10	209
13028.S	Satin finished AISI 304 STAINLESS STEEL washbasin Ø305 on countertop	64,50	208
13028.S.PLANA	Satin finished AISI 304 STAINLESS STEEL washbasin Ø305 under countertop	64,50	209
13029.B	Polish finished AISI 304 STAINLESS STEEL washbasin Ø355 on countertop	58,00	208
13029.B.PLANA	Polish finished AISI 304 STAINLESS STEEL washbasin Ø355 under countertop	58,00	209
13029.RB	Polish finished AISI 304 STAINLESS STEEL washbasin Ø355 on countertop with overflow	60,40	208
13029. RB.PLANA	Polish finished AISI 304 STAINLESS STEEL washbasin Ø355 under countertop with overflow	60,40	209
13029.RS	Satin finished AISI 304 STAINLESS STEEL washbasin Ø355 on countertop with overflow	73,90	208
13029. RS.PLANA	Satin finished AISI 304 STAINLESS STEEL washbasin Ø355 under countertop with overflow	73,90	209
13029.S	Satin finished AISI 304 STAINLESS STEEL washbasin Ø355 on countertop	71,50	208
13029.S.PLANA	Satin finished AISI 304 STAINLESS STEEL washbasin Ø355 under countertop	71,50	209
13030.B	Polish finished AISI 304 STAINLESS STEEL washbasin Ø405 on countertop	60,90	208
13030.B.PLANA	Polish finished AISI 304 STAINLESS STEEL washbasin Ø405 under countertop	60,90	209
13030.RB	Polish finished AISI 304 STAINLESS STEEL washbasin Ø405 on countertop with overflow	63,50	208
13030. RB.PLANA	Polish finished AISI 304 STAINLESS STEEL washbasin Ø405 under countertop with overflow	63,50	209
13030.RS	Satin finished AISI 304 STAINLESS STEEL washbasin Ø405 on countertop with overflow	80,40	208
13030. RS.PLANA	Satin finished AISI 304 STAINLESS STEEL washbasin Ø405 under countertop with overflow	80,40	209
13030.S	Satin finished AISI 304 STAINLESS STEEL washbasin Ø405 on countertop	78,00	208
13030.S.PLANA	Satin finished AISI 304 STAINLESS STEEL washbasin Ø405 under countertop	78,00	209
13033.S	AISI 304 STAINLESS STEEL washbasin	546,00	211
13036.A.S	AISI 304 STAINLESS STEEL washbasin	203,00	210
13036.ALR.S	AISI 304 STAINLESS STEEL washbasin	192,50	210
13036.C.S	AISI 304 STAINLESS STEEL washbasin	311,00	213
13036.CLR.S	AISI 304 STAINLESS STEEL washbasin	311,00	213
13036.P.S	AISI 304 STAINLESS STEEL vandal-proof washbasin	469,00	227
13036.PL.S	AISI 304 STAINLESS STEEL vandal-proof washbasin	469,00	227
13036.PR.S	AISI 304 STAINLESS STEEL vandal-proof washbasin	469,00	227
13036.W	AISI 304 STAINLESS STEEL washbasin with faucet	992,00	213
13037.B	AISI 304 STAINLESS STEEL washbasin	246,50	210
13038.B	AISI 304 STAINLESS STEEL washbasin	314,00	211
13039.A.S	AISI 304 STAINLESS STEEL washbasin	258,00	211
13040.S	AISI 304 STAINLESS STEEL washbasin	787,00	212
13041.B	AISI 304 STAINLESS STEEL washbasin	379,00	211
13042.B	AISI 304 STAINLESS STEEL washbasin	578,00	211

CODE	DESCRIPTION	PRICE	PG
13044.BAT	AISI 304 STAINLESS STEEL washbasin	1233,00	207
13044.MINI	AISI 304 STAINLESS STEEL washbasin	720,00	207
13044.MOV	AISI 304 STAINLESS STEEL washbasin	1744,00	207
13044.S	AISI 304 STAINLESS STEEL washbin	629,00	207
13045.S	AISI 304 STAINLESS STEEL washbasin	653,00	207
13046.BAT	AISI 304 STAINLESS STEEL washbasin	996,00	212
13046.S	AISI 304 STAINLESS STEEL washbasin	508,00	212
13050.06.S	AISI 304 STAINLESS STEEL collective washbasin 600 mm	460,00	216
13050.06.SO.S	AISI 304 STAINLESS STEEL collective washbasin 600 mm	480,00	216
13050.06.SP.S	AISI 304 STAINLESS STEEL collective washbasin 600 mm	460,00	217
13050.06.SPO.S	AISI 304 STAINLESS STEEL collective washbasin 600 mm	459,00	217
13050.12.S	AISI 304 STAINLESS STEEL collective washbasin 1200 mm	621,00	216
13050.12.SO.S	AISI 304 STAINLESS STEEL collective washbasin 1200 mm	653,00	216
13050.12.SP.S	AISI 304 STAINLESS STEEL collective washbasin 1200 mm	626,00	217
13050.12.SPO.S	AISI 304 STAINLESS STEEL collective washbasin 1200 mm	640,00	217
13050.18.S	AISI 304 STAINLESS STEEL collective washbasin 1800 mm	753,00	216
13050.18.SO.S	AISI 304 STAINLESS STEEL collective washbasin 1800 mm	785,00	216
13050.18.SP.S	AISI 304 STAINLESS STEEL collective washbasin 1800 mm	723,00	217
13050.18.SPO.S	AISI 304 STAINLESS STEEL collective washbasin 1800 mm	774,00	217
13050.24.S	AISI 304 STAINLESS STEEL collective washbasin 2400 mm	958,00	216
13050.24.SO.S	AISI 304 STAINLESS STEEL collective washbasin 2400 mm	1053,00	216
13050.24.SP.S	AISI 304 STAINLESS STEEL collective washbasin 2400 mm	910,00	217
13050.24.SPO.S	AISI 304 STAINLESS STEEL collective washbasin 2400 mm	1021,00	217
13050.30.S	AISI 304 STAINLESS STEEL collective washbasin 3000 mm	1195,00	216
13050.30.SO.S	AISI 304 STAINLESS STEEL collective washbasin 3000 mm	1337,00	216
13050.30.SP.S	AISI 304 STAINLESS STEEL collective washbasin 3000 mm	1143,00	217
13050.30.SPO.S	AISI 304 STAINLESS STEEL collective washbasin 3000 mm	1326,00	217
13050.C	Galvanized STEEL collective washbasin bracket	41,50	219
13050.P	STAINLESS STEEL collective washbasin	41,50	219
13054.2.S	AISI 304 STAINLESS STEEL shower tray	284,00	206
13054.P	AISI 304 STAINLESS STEEL shower tray water outlet through wall	371,00	226
13055.2.S	AISI 304 STAINLESS STEEL shower tray	544,00	206
13056.2.S	AISI 304 STAINLESS STEEL shower tray	684,00	206
13058.2.S	AISI 304 STAINLESS STEEL bathtub	992,00	206
13060.S	AISI 304 STAINLESS STEEEL design washbasin	321,00	220
13061.S	AISI 304 STAINLESS STEEEL design washbasin	260,00	220
13062.S	AISI 304 STAINLESS STEEEL design washbasin	453,65	221
13063.S	AISI 304 STAINLESS STEEEL design washbasin	501,50	221
13070.1.S	AISI 304 STAINLESS STEEL, one service	880,00	218
13070.2.S	AISI 304 STAINLESS STEEL, two services	1231,00	218
13070.3.S	AISI 304 STAINLESS STEEL, three services	1657,00	218
13071.1.S	AISI 304 STAINLESS STEEL, one service	718,00	218
13071.2.S	AISI 304 STAINLESS STEEL, two services	944,00	218
13071.3.S	AISI 304 STAINLESS STEEL, three services	1172,00	218
13080.1.S	AISI 304 STAINLESS STEEL, one service	1066,00	218
13080.2.S	AISI 304 STAINLESS STEEL, two services	1519,00	218
13080.3.S	AISI 304 STAINLESS STEEL, three services	1842,00	218
13081.1.S	AISI 304 STAINLESS STEEL, one service	914,00	218
13081.2.S	AISI 304 STAINLESS STEEL, two services	1186,00	218
13081.3.S	AISI 304 STAINLESS STEEL, three services	1405,00	218
13097.B	Polish finished AISI 304 STAINLESS STEEL wall mounted squared washbasin	537,00	213
13105.B	Chromed BRASS valve and siphon	42,40	219
13106.N	ABS drain valve	6,25	219
13107.B	Chromed BRASS valve, siphon and overflow tube	79,10	219
13108.N	ABS valve, siphon and overflow tube	40,60	219
13110.B	Chromed BRASS valve, siphon and overflow tube	105,00	219
13111.K	WC water outlet connection	10,60	200
13112.K	WC water outlet connection	10,60	200
13113.B	STAINLESS STEEL drill cover	11,35	311
13114.W	ABS valve and siphon	8,05	219
13123.C	AISI 304 STAINLESS STEEL compact equipment WC and wash basin. WC central position	1977,00	230
13123.L	AISI 304 STAINLESS STEEL compact equipment WC and wash basin. WC left position	1977,00	230
13123.R	AISI 304 STAINLESS STEEL compact equipment WC and wash basin. WC right position	1977,00	230
13124.L	AISI 304 STAINLESS STEEL compact equipment WC and wash basin. WC left position	1999,00	231
13124.R	AISI 304 STAINLESS STEEL compact equipment WC and wash basin. WC right position	1999,00	231
13142.KIT	Ergonomic toilet pan kit with cistern and cover	326,00	293
13143.KIT	Ergonomic toilet pan kit with cistern and cover	474,00	293
13144.I	Ergonomic toilet pan seat for H50M toilet pan	96,50	293
13145	Toilet seat with cover for toilet pan for children 13146	98,50	291
13146S	White CERAMICS toilet pan for children	275,00	291

CODE	DESCRIPTION	PRICE	PG
13147.W	Toilet seat with cover for toilet pan for children	38,30	199
13148.W	Toilet seat with cover for toilet pan for children	39,40	199
13182.B	Manual pneumatic flush concealed installation	69,80	292
13184.B	Manual pneumatic flush exposed installation	85,50	292
13220.8080.K	Shower plate	515,00	297
13220.9090.K	Shower plate	605,00	297
13220.80100.K	Shower plate	534,00	297
13220.80120.K	Shower plate	605,00	297
13220.80140.K	Shower plate	689,00	297
13220.80160.K	Shower plate	725,00	297
14018.W	Plastic bin with white ABS pedal 23 liters	34,60	256
14019.W	Plastic bin with polypropylene pedal 23 liters	110,00	257
14020.W	Container with pedal, handle and polypropylene wheels 120 liters	145,00	257
14021.W	Container , handle, cover with clipo and polypropylene wheels 85 liters	76,60	257
14022.W	Hygienic bin with pedal and polypropylene inner bucket 8 liters	24,10	260
14023.W	Trash can with polypropylene lid pivoting 45 liters	49,90	256
14025.W	ABS bin, square, cover and pedal 8 liters	31,00	256
14026.W	ABS bin, square, cover and pedal 23 liters	27,90	256
14027.W	ABS bin, rectangulat, cover and pedal 55 liters	52,30	257
14028.BK	Black series black, foot trash bin 13 liters	59,70	117
14029.BK	Bagholder ring for trash 14028 BLACK series, black	21,90	117
14030.BK	Black series black, foot trash bin 23 liters	63,30	117
14040.BK	Cover for trash bin 14030 BLACK series, black	32,20	117
14071.15.S	AISI 304 STAINLESS STEEL bin 15 liters with cover	301,00	251
14071.15.SC.S	AISI 304 STAINLESS STEEL bin 15 liters	107,00	250
14071.50.S	AISI 304 STAINLESS STEEL bin 50 liters with cover	335,50	251
14071.50.SC.S	AISI 304 STAINLESS STEEL bin 50 liters	190,80	250
14071.80.S	AISI 304 STAINLESS STEEL bin 80 liters with cover	408,00	251
14071.80.SC.S	AISI 304 STAINLESS STEEL bin 80 liters	201,00	250
14073.S	AISI 304 STAINLESS STEEL recycling bin 150 liters with cover	863,00	251
14073.SC.S	AISI 304 STAINLESS STEEL recycling bin 150 liters	507,00	250
14075.40.B	AISI 304 STAINLESS STEEL bin 40 liters with cover	232,00	251
14075.40.SC.B	AISI 304 STAINLESS STEEL bin 40 liters	169,50	250
14075.65.B	AISI 304 STAINLESS STEEL bin 65 liters with cover	324,50	251
14075.65.SC.B	AISI 304 STAINLESS STEEL bin 65 liters	226,90	250
14075.80.B	AISI 304 STAINLESS STEEL bin 80 liters with cover	416,50	251
14075.80.SC.B	AISI 304 STAINLESS STEEL bin 80 liters	306,00	250
14077.B	Polish finished AISI 304 STAINLESS STEEL wall mounted bin 23 liters	116,50	254
14077.S	Polish finished AISI 304 STAINLESS STEEL wall mounted bin 23 liters	100,50	254
14077.W	Polish finished AISI 304 STAINLESS STEEL wall mounted bin 23 liters	100,50	254
14078.B	Polish finished AISI 304 STAINLESS STEEL wall mounted bin 23 liters	184,50	254
14078.S	Polish finished AISI 304 STAINLESS STEEL wall mounted bin 23 liters	184,50	254
14078.W	Polish finished AISI 304 STAINLESS STEEL wall mounted bin 23 liters	120,50	254
14079.B	Polish finished AISI 304 STAINLESS STEEL wall mounted bin 23 liters	194,50	254
14079.S	Polish finished AISI 304 STAINLESS STEEL wall mounted bin 23 liters	194,50	254
14079.W	Polish finished AISI 304 STAINLESS STEEL wall mounted bin 23 liters	130,50	254
14082.2.W	Painted STEEL bin 12 liters	23,80	253
14096.2.S	Satin finished STAINLESS STEEL bin with handles 12 liters	75,70	253
14098.2.S	Satin finished STAINLESS STEEL bin with handles 11 liters	67,00	255
14098.2.W	Painted STEEL wall bin 11 liters	38,10	255
14102.S	AISI 304 STAINLESS STEEL semi-embedded bin 38 liters	338,00	259
14103.S	AISI 304 STAINLESS STEEL embedded bin 21 liters	407,00	258
14104.P.S	AISI 304 STAINLESS STEEL embedded bin 38 liters	445,00	258
14105.S	AISI 304 STAINLESS STEEL embedded wall bin 35 liters	426,00	259
14106.P.S	AISI 304 STAINLESS STEEL embedded bin 21 liters	427,00	258
14107.S	AISI 304 STAINLESS STEEL wall hung bin 13 liters	546,00	259
14114.B	Polish finished STAINLESS STEEL bin 10 liters	40,60	252
14115.S	AISI 304 STAINLESS STEEL PUSH-OPEN bin 40 liters	212,00	252
14118.2.W	Painted STEEL bin with pivoting llid 40 liters	171,50	252
14118.S	Satin finished STAINLESS STEEL bin 40 liters	255,00	252
14122.2.S	Satin finished STAINLESS STEEL bin with ashtray 24 liters	142,50	255
14122.2.W	Painted STEEL bin with ashtray 24 liters	82,80	255
14124.2.S	Satin finished STAINLESS STEEL bin with ashtray 24 liters	160,50	255
14124.2.W	Painted STEEL bin with ashtray 24 liters	82,10	255
14160.B	Polish finished STAINLESS STEEL wall mounted ashtray	13,80	165
14161.S	Satin finished STAINLESS STEEL floor settled ashtray	99,10	165
14162.S	Satin finished STAINLESS STEEL floor settled ashtray	58,80	165
14173.N	Free-standing hanger with six ABS hangers. Black color	126,10	263
14173.P	Free-standing hanger with six ABS hangers. Silver grey color	132,00	263
14176.P	Metal hanger-umbrella stand with eight black color hangers	169,00	262

CODE	DESCRIPTION	PRICE	PG
14178.P	Free-standing painted STEEL coat hanger with 8 hangers	128,25	262
14184.P	Free-standing painted STEEL coat hanger with 8 hangers. Detachable	138,00	262
14188.2.S	Satin finished STAINLESS STEEL bin with pin tumbler lock	235,25	255
15001.1.S.2	Surgical washbasin with backsplash for 1 user	2431,40	223
15001.2.S.2	Surgical washbasin with backsplash for 2 users	3160,00	223
15001.3.S.2	Surgical wash basin with backsplash for 3 users	3902,25	223
15010.SG	AISI 304 STAINLESS STEEL flush mounted bedpan washer one faucet	1080,00	223
15010.SM	AISI 304 STAINLESS STEEL flush mounted bedpan washer one mixer	1140,00	223
15010.ST	AISI 304 STAINLESS STEEL flush mounted bedpan washer one self-closing faucet	1086,00	223
15010.STM	AISI 304 STAINLESS STEEL flush mounted bed pan washer one self-closing mixer	1380,00	223
15011.S	AISI 304 STAINLESS STEEL holder for one bed pan	49,90	223
15012.S	AISI 304 STAINLESS STEEL holder for two bed pans	67,50	223
15013.S	AISI 304 STAINLESS STEEL holder for one hygienic bottle	89,00	223
15014.S	AISI 304 STAINLESS STEEL holder for two hygienic bottles	97,70	223
15029.S	STAINLESS STEEL toilet cover for 13012, 13013 and 13018 toilet pans	216,50	198
15030.BK	Black painted WOOD toilet cover for 13014 toilet pan for children	213,00	200
15031.NG	WOOD toilet cover for 13012, 13013 and 13018 toilet pans	263,00	199
15032.W	POLYPROPYLENE ergonomic raised toilet seat without cover	58,80	296
15033.W	POLYPROPYLENE ergonomic raised toilet seat with cover	69,70	296
15034.W	POLYPROPYLENE ergonomic raised toilet seat with cover and handles	186,50	296
15035.W	Foldable shower seat ALUMINIUM and POLYPROPILENE	135,00	288
15036.W	White ABS bathstool	34,80	290
15037.W	White POLYPROPYLENE bathstool with adjustable feet	150,50	290
15038.W	White POLYPROPYLENE bathstool with STAINLESS STEEL feet	145,70	290
15039.W	POLYPROPYLENE ergonomic raised toilet seat with cover and front opening	119,00	297
15041.S	Satin finish STAINLESS STEEL foldable shower seat	174,50	288
15042.FIX.NBA	NYLON series - POLYPROPYLENE folding seat with backrest	321,00	286
15042.MOV.B	Polish finished STAINLESS STEEL removable shower seat (not foldable)	323,00	288
15042.MOV.N36	NYLON series - folding shower seat	403,00	285
15042.MOV.NBA	NYLON series - POLYPROPYLENE remobable and foldable seat with backrest	250,00	286
15042.MOV.S	Satin finished STAINLESS STEEL removable shower seat (not foldable)	317,00	288
15042.MOV.W	White finished STAINLESS STEEL removable shower seat (not foldable)	323,00	288
15042.N36	NYLON series - folding shower seat	316,00	285
15042.NBA	NYLON series - POLYPROPYLENE folding seat	250,00	286
15042.PAT.NBA	NYLON series - POLYPROPYLENE folding seat with backrest and floor feet	337,00	286
15042.PIE.NBA	NYLON series - shower seat	262,00	286
15043.N	ALUMINIUM-NYLON bathtub seat	541,00	290
15044.N	ALUMINIUM-NYLON bathroom stool	168,50	290
15045.B	Polish finished STAINLESS STEEL foldable shower seat	227,50	287
15045.N	ALUMINIUM-NYLON bathroom stool	199,00	290
15045.S	Satin finished STAINLESS STEEL foldable shower seat	215,50	287
15045.W	White finished STAINLESS STEEL foldable shower seat	239,00	287
15046.B	Polish finished STAINLESS STEEL foldable shower seat	207,00	287
15046.S	Satin finished STAINLESS STEEL foldable shower seat	203,00	287
15046.W	White finished STAINLESS STEEL foldable shower seat	208,00	287
15047.60.N36	NYLON series - Triple arm ALUMINIUM grab bar	130,00	283
15047.60.NBA	NYLON series - Grab bar with three wall fixing points. Reversible position.	164,00	281
15047.80.N36	NYLON series - Triple arm ALUMINIUM grab bar	144,00	283
15047.80.NBA	NYLON series - Grab bar with three wall fixing points. Reversible position.	188,00	281
15047.B	Polish finished AISI 304 STAINLESS STEEL triple support grab bar	158,00	270
15047.S	Satin finished AISI 304 STAINLESS STEEL triple support grab bar	152,50	270
15047.W	White finished AISI 304 STAINLESS STEEL triple support grab bar	182,50	270
15048.B	Polish finished AISI 304 STAINLESS STEEL triple support grab bar	158,00	270
15048.S	Satin finished AISI 304 STAINLESS STEEL triple support grab bar	152,50	270
15048.W	White finished AISI 304 STAINLESS STEEL triple support grab bar	182,50	270
15049.B	Polish finished AISI 304 STAINLESS STEEL shower grab bar	202,00	273
15049.N36	NYLON series - Triple arm ALUMINIUM grab bar	158,00	284
15049.NBA	NYLON series - Shower grab bar	157,00	279
15049.S	Satin finished AISI 304 STAINLESS STEEL shower grab bar	192,50	273
15049.W	White finished AISI 304 STAINLESS STEEL shower grab bar	207,00	273
15050.B	Polish finished AISI 304 STAINLESS STEEL shower grab bar	202,00	273
15050.N36	NYLON series - Triple arm ALUMINIUM grab bar	158,00	284
15050.NBA	NYLON series - Shower grab bar	157,00	279
15050.S	Satin finished AISI 304 STAINLESS STEEL shower grab bar	192,50	273
15050.W	White finished AISI 304 STAINLESS STEEL shower grab bar	207,00	273
15051.60.B	Polish finished AISI 304 STAINLESS STEEL 600 mm swing-up grab bar	135,00	268
15051.60.F	White finished STEEL 600 mm swing-up grab bar	84,20	268
15051.60.NBA	NYLON series - Swing-up grab bar	178,00	277
15051.60.S	Satin finished AISI 304 STAINLESS STEEL 600 mm swing-up grab bar	124,00	268
15051.60.W	White finished AISI 304 STAINLESS STEEL 600 mm swing-up grab bar	122,00	268

CODE	DESCRIPTION	PRICE	PG
15051.80.B	Polish finished AISI 304 STAINLESS STEEL 600 mm swing-up grab bar	140,50	268
15051.80.F	White finished STEEL 800 mm swing-up grab bar	90,60	268
15051.80.N36	NYLON series - polyamide coated aluminum folding bar	211,50	283
15051.80.NBA	NYLON series - Swing-up grab bar	215,00	277
15051.80.S	Satin finished AISI 304 STAINLESS STEEL 800 mm swing-up grab bar	129,00	268
15051.80.W	White finished AISI 304 STAINLESS STEEL 800 mm swing-up grab bar	126,50	268
15051.85.B	Polish finished AISI 304 STAINLESS STEEL 850 mm swing-up grab bar	153,50	268
15051.85.S	Satin finished AISI 304 STAINLESS STEEL 850 mm swing-up grab bar	143,00	268
15051.85.W	White finished AISI 304 STAINLESS STEEL 850 mm swing-up grab bar	143,00	268
15051.NPR	NYLON series - Toilet paper holder for swing-up grab bar	14,60	277
15051.SP.80.B	Polish finished AISI 304 STAINLESS STEEL 800 mm swing-up grab bar	146,00	268
15051.SP.80.S	Satin finished AISI 304 STAINLESS STEEL 800 mm swing-up grab bar	128,00	268
15051.SP.80.W	White finished AISI 304 STAINLESS STEEL 800 mm swing-up grab bar	126,50	268
15052.105.N36	NYLON series - Polyamide coated aluminum straight bar	260,00	285
15052.B	Polish finished AISI 304 STAINLESS STEEL shower grab bar	121,50	273
15052.N36	NYLON series - Polyamide coated aluminum bar angle 90 °	114,00	285
15052.NBA	NYLON series - Shower grab bar	109,00	279
15052.S	Satin finished AISI 304 STAINLESS STEEL shower grab bar	102,00	273
15052.W	White finished AISI 304 STAINLESS STEEL shower grab bar	128,00	273
15053.B	Polish finished AISI 304 STAINLESS STEEL grab bar kit for hotel	397,00	269
15053.S	Satin finished AISI 304 STAINLESS STEEL grab bar kit for hotel	397,00	269
15053.W	White finished AISI 304 STAINLESS STEEL grab bar kit for hotel	397,00	269
15054.100.B	Polish finished AISI 304 STAINLESS STEEL 1000 mm straight grab bar	109,50	267
15054.100.N36	NYLON series - Polyamide coated aluminum straight bar	67,30	282
15054.100.S	Satin finished AISI 304 STAINLESS STEEL 1000 mm straight grab bar	96,80	267
15054.100.W	White finished AISI 304 STAINLESS STEEL 1000 mm straight grab bar	97,50	267
15054.120.B	Polish finished AISI 304 STAINLESS STEEL 1200 mm straight grab bar	116,00	267
15054.120.NBA	NYLON series - 1200 mm straight grab bar	114,00	277
15054.120.S	Polish finished AISI 304 STAINLESS STEEL 1200 mm straight grab bar	103,00	267
15054.120.W	White finished AISI 304 STAINLESS STEEL 1200 mm straight grab bar	104,50	267
15054.170.N36	NYLON series - Polyamide coated aluminum straight bar	127,60	282
15054.30.B	Polish finished AISI 304 STAINLESS STEEL 300 mm straight grab bar	35,40	267
15054.30.F	White finished STEEL 300 mm straight grab bar	24,75	267
15054.30.NBA	NYLON series - 300 mm straight grab bar	44,10	277
15054.30.S	Polish finished AISI 304 STAINLESS STEEL 300 mm straight grab bar	31,20	267
15054.30.W	White finished AISI 304 STAINLESS STEEL 300 mm straight grab bar	35,10	267
15054.40.N36	NYLON series - Polyamide coated aluminum straight bar	46,40	282
15054.40.NBA	NYLON series - 300 mm straight grab bar	48,30	277
15054.45.B	Polish finished AISI 304 STAINLESS STEEL 300 mm straight grab bar	38,30	267
15054.45.F	White finished STEEL 450 mm straight grab bar	27,45	267
15054.45.S	Polish finished AISI 304 STAINLESS STEEL 100 mm straight grab bar	34,80	267
15054.45.W	White finished AISI 304 STAINLESS STEEL 100 mm straight grab bar	39,60	267
15054.50.N36	NYLON series - Polyamide coated aluminum straight bar	51,10	282
15054.50.NBA	NYLON series - 500 mm straight grab bar	54,80	277
15054.60.B	Polish finished AISI 304 STAINLESS STEEL 600 mm straight grab bar	43,70	267
15054.60.F	White finished STEEL 600 mm straight grab bar	31,20	267
15054.60.NBA	NYLON series - 600 mm straight grab bar	58,70	277
15054.60.S	Polish finished AISI 304 STAINLESS STEEL 100 mm straight grab bar	39,60	267
15054.60.W	White finished AISI 304 STAINLESS STEEL 100 mm straight grab bar	45,90	267
15054.65.N36	NYLON series - Polyamide coated aluminum straight bar	55,70	282
15054.73.NBA	NYLON series - 730 mm straight grab bar	68,70	277
15054.80.B	Polish finished AISI 304 STAINLESS STEEL 800 mm straight grab bar	50,40	267
15054.80.F	White finished STEEL 800 mm straight grab bar	32,20	267
15054.80.S	Polish finished AISI 304 STAINLESS STEEL 100 mm straight grab bar	46,20	267
15054.80.W	White finished AISI 304 STAINLESS STEEL 100 mm straight grab bar	47,80	267
15054.90.NBA	NYLON series - 900 mm straight grab bar	99,30	277
15060.B	Polish finished AISI 304 STAINLESS STEEL 100 mm angled grab bar	128,50	272
15060.NBA	NYLON series - Shower grab bar	129,00	278
15060.S	Satin finished AISI 304 STAINLESS STEEL 100 mm angled grab bar	119,50	272
15060.W	White finished AISI 304 STAINLESS STEEL 100 mm angled grab bar	121,00	272
15061.N36	NYLON series - Polyamide coated aluminum straight bar	130,00	282
15062.B	Polish finished AISI 304 STAINLESS STEEL swing-up grab bar floor support	200,00	269
15062.S	Satin finished AISI 304 STAINLESS STEEL swing-up grab bar floor support	168,00	269
15062.W	White finished AISI 304 STAINLESS STEEL swing-up grab bar floor support	138,00	269
15064.B	Polish finished AISI 304 STAINLESS STEEL swing-up grab bar floor anchorage	249,50	269
15064.N36	NYLON series - Swing-up grab bar with polyamide-coated aluminium floor support	283,50	283
15064.NBA	NYLON series - Swing-up grab bar with floor anchorage	438,00	280
15064.S	Satin finished AISI 304 STAINLESS STEEL swing-up grab bar floor anchorage	234,00	269
15064.W	White finished AISI 304 STAINLESS STEEL swing-up grab bar floor anchorage	249,50	269
15065.50.S	Adapted folding seat of phenolic board STAINLESS STEEL AISI 304 satin	226,00	287

CODE	DESCRIPTION	PRICE	PG
15065.S	AISI 304 STAINLESS STEEL foldable shower phenolic seat	213,50	287
15066.S	AISI 304 STAINLESS STEEL foldable shower padded seat	279,50	287
15067.2.W	ALUMINIUM-ABS foldable shower seat	100,50	288
15069.B	Polish finished AISI 304 STAINLESS STEEL 60° grab bar	109,00	273
15069.S	Satin finished AISI 304 STAINLESS STEEL 60° grab bar	99,40	273
15069.W	White finished AISI 304 STAINLESS STEEL 60° grab bar	106,00	273
15070.NBA	NYLON series - Handle	58,50	281
15071.NBA	NYLON series - Hook	22,60	281
15074.L	Double adapted shower seat of phenolic board and AISI 304 stainless steel wall bracket	471,00	288
15075.BK	Polyurethane padded backrest	149,00	292
15077.S	AISI 304 STAINLESS STEEL backrest	127,00	287
15158.120.70.NBA	NYLON series - Angled grab bar	176,00	278
15158.B	Polish finished AISI 304 STAINLESS STEEL 90° grab bar	120,00	272
15158.N36	NYLON series polyamide coated aluminum bar angle 90°	107,00	284
15158.NBA	NYLON series - Angled grab bar	115,00	278
15158.S	Satin finished AISI 304 STAINLESS STEEL 90° grab bar	116,50	272
15158.W	White finished AISI 304 STAINLESS STEEL 90° grab bar	180,50	272
15159.120.70.NBA	NYLON series - Angled grab bar	176,00	279
15159.B	Polish finished AISI 304 STAINLESS STEEL 90° grab bar	120,00	272
15159.N36	NYLON series polyamide coated aluminum bar angle 90°	107,00	284
15159.NBA	NYLON series - Angled grab bar	115,00	278
15159.S	Satin finished AISI 304 STAINLESS STEEL 90° grab bar	116,50	272
15159.W	White finished AISI 304 STAINLESS STEEL 90° grab bar	180,50	272
15161.B	Adapted support bar, angled 135° AISI 304 STAINLESS STEEL bright	80,00	272
15161.NBA	NYLON series adapted support bar ALUMINIUM coeted with antibacterial polymers	70,00	278
15161.S	Adapted support bar, angled 135° AISI 304 STAINLESS STEEL satin	70,00	272
15161.W	Adapted support bar 135° STEEL white	55,00	272
15162.B	Polish finished AISI 304 STAINLESS STEEL grab bar	140,00	272
15162.NBA	NYLON series adapted support bar ALUMINIUM coeted with antibacterial polymers	140,00	279
15162.S	Adapted support bar AISI 304 STAINLESS STEEL, white	140,00	272
15162.W	Adapted support bar AISI 304 STAINLESS STEEL, satin	110,00	272
15198.B	Polish finished AISI 304 STAINLESS STEEL wall-floor grab bar	134,00	271
15198.S	Satin finished AISI 304 STAINLESS STEEL wall-floor grab bar	103,00	271
15198.W	White finished AISI 304 STAINLESS STEEL wall-floor grab bar	111,00	271
15203.B	Polish finished AISI 304 STAINLESS STEEL wall-floor grab bar	191,50	271
15203.NBA	NYLON series - Wall-floor anchored grab bar, reversible	189,00	280
15203.S	Satin finished AISI 304 STAINLESS STEEL wall-floor grab bar	176,50	271
15203.W	White finished AISI 304 STAINLESS STEEL wall-floor grab bar	180,50	271
15204.B	Polish finished AISI 304 STAINLESS STEEL wall-floor gab bar	197,50	271
15204.S	Satin finished AISI 304 STAINLESS STEEL wall-floor gab bar	176,50	271
15204.W	White finished AISI 304 STAINLESS STEEL wall-floor gab bar	180,50	271
15206.B	Polish finished AISI 304 STAINLESS STEEL swing-up grab bar with foot to floor	290,00	269
15206.NBA	NYLON series - 800 mm swing-up grab bar with support to floor	321,00	280
15206.S	Satin finished AISI 304 STAINLESS STEEL swing-up grab bar with foot to floor	280,50	269
15206.W	White finished AISI 304 STAINLESS STEEL swing-up grab bar with foot to floor	290,00	269
15209.32.B	Brascket shower sprayer Chrome-plated ABS	37,20	273
15209.32.NBA	NYLON series bracket shower sprayer, white	23,00	280
15209.34.B	Brascket shower sprayer Chrome-plated ABS	33,40	273
15209.34.NBA	NYLON series bracket shower sprayer, white	15,50	280
15210.K	Non-conductive plate	6,00	270
15211.K	Non-conductive plate	3,30	270
15213.K	Non-conductive plate	3,30	270
15220.K	Non-conductive plate	3,30	270
16051.2.S	Satin finished STAINLESS STEEL door stop	9,75	164
16330.B	SANTORINI series - towel rail	60,90	120
16331.B	SANTORINI series - towel rail	51,90	120
16332.B	SANTORINI series - grab handrail	60,20	120
16333.B	SANTORINI series - toilet paper holder	51,90	121
16334.B	SANTORINI series - toilet paper reserve	30,00	122
16335.B	SANTORINI series - toilet paper holder	45,90	122
16339.B	SANTORINI series - toothbrush	32,90	121
16340.B	SANTORINI series - towel rail	32,90	121
16341.B	SANTORINI series - towel rail	40,00	120
16342.B	SANTORINI series - towel rail	68,40	122
16343.B	SANTORINI series - towel rail	26,40	122
16344.B	Shower support bar Chrome-plated brass bright	228,00	123
16345.B	Angular shower support bar Chrome-plated brass bright	206,00	123
16350.B	SIENA series - Chromed BRASS toilet paper reserve	22,90	128

CODE	DESCRIPTION	PRICE	PG
16351.B	SIENA series - 520 mm chromed BRASS straightbar	39,40	126
16352.B	SIENA series - 300 mm chromed BRASS straight bar	36,00	126
16354.B	SIENA series - Chromed BRASS angled handle	52,20	127
16355.B	SIENA series - Chromed BRASS angled handle with soap basket	65,40	127
16356.B	SIENA series - Toothbrush glass with chromed BRASS support	28,10	128
16357.B	SIENA series - Chromed BRASS large towel hoop	33,30	126
16358.B	SIENA series - Chromed BRASS towel shelf with lower bar	122,50	129
16359.B	SIENA series - Chromed BRASS hook	19,45	129
16360.B	SIENA series - Chromed BRASS double hook	26,30	129
16361.B	SIENA series - Chromed BRASS toilet paper dispenser	46,80	128
16362.B	SIENA series - Chromed BRASS soap dish	36,00	127
16363.B	SIENA series - Chromed BRASS hook	14,00	129
16370.B	MONACO series - Chromed BRASS double hook	18,00	133
16371.B	MONACO series - Chromed BRASS towel rail	44,40	132
16372.B	MONACO series - Chromed BRASS soap dish	24,60	132
16373.B	MONACO series - Chromed BRASS double hook	18,00	132
16374.B	MONACO series - Chromed BRASS toilet paper dispenser	40,90	133
16376.B	MONACO series - toothbrush glass with chromed BRASS support	23,05	132
16377.B	MONACO series - Chromed BRASS towel hoop	28,40	132
16378.B	MONACO series - Chromed BRASS towel shelf with lower bar	109,00	133
16379.B	MONACO series - Chromed BRASS hook	16,85	133
16381.B	MONACO series - Chromed BRASS toilet paper reserve	22,05	133
16401.B	HOTEL series - 450 mm polish finished ZAMAC towel rail	18,20	168
16402.B	HOTEL series - 600 mm polish finished ZAMAC towel rail	19,50	168
16404.B	HOTEL series - 450 mm polish finished ZAMAC double towel rail	42,70	169
16405.B	HOTEL series - 600 mm polish finished ZAMAC double towel rail	33,10	169
16406.B	HOTEL series - Polish finished ZAMAC towel shelf	58,80	170
16407.B	HOTEL series - Polish finished ZAMAC towel hoop	10,90	168
16408.B	HOTEL series - Polish finished ZAMAC double towel rail	27,80	169
16409.B	HOTEL series - Polish finished ZAMAC hook	7,05	170
16410.B	HOTEL series - Glass for toothbrush with polish finished ZAMAC support	14,30	168
16411.B	HOTEL series - Polish finished ZAMAC toilet paper reserve	26,50	171
16412.B	HOTEL series - Polish finished ZAMAC soap dish	11,15	169
16413.B	HOTEL series - Glass soap dish with polish finished ZAMAC support	13,80	169
16415.B	HOTEL series - Glass utility shelf with polish finished ZAMAC supports	27,05	168
16416.B	HOTEL series - Polish finished ZAMAC toilet paper dispenser	17,40	171
16417.B	HOTEL series - Polish finished ZAMAC toilet paper dispenser	21,30	171
16418.B	HOTEL series - Toilet brush with polish finished ZAMAC support and CERAMICS container	24,45	170
16419.B	HOTEL series - Polish finished ZAMAC double hook	8,60	170
16500.B	LINE series - Polish finished ZAMAC tiolet paper dispenser	26,60	177
16500.S	LINE series - Satin finished Zamac toilet paper dispenser	33,90	177
16500.W	LINE series - White finished ZAMAC tiolet paper dispenser	20,30	177
16501.B	LINE series - 450 mm satin finished Zamac towel rail	34,60	175
16501.S	LINE series - 450 mm polish finished Zamac towel rail	36,50	175
16502.B	LINE series - 600 mm polish finished Zamac towel rail	35,20	175
16502.S	LINE series - 600 mm satin finished Zamac towel rail	37,20	175
16502.W	LINE series - 600 mm white finished Zamac towel rail	30,20	175
16503.B	LINE series - 750 mm polish finished Zamac towel rail	37,90	175
16504.B	LINE series - Polish finished Zamac towel hoop	37,10	174
16504.S	LINE series - Satin finished Zamac towel hoop	33,20	174
16504.W	LINE series - White finished Zamac towel hoop	23,90	174
16505.B	LINE series - Polish finished Zamac toilet paper reserve	24,40	176
16505.S	LINE series - Satin finished Zamac toilet paper reserve	26,90	176
16505.W	LINE series - White finished Zamac toilet paper reserve	23,80	176
16506.B	LINE series - Polish finished Zamac hook	13,30	176
16507.B	LINE series - Polish finished Zamac hook strip with four hooks	21,30	175
16507.W	LINE series - White finished Zamac hook strip with four hooks	18,60	175
16508.B	LINE series - Polish finished Zamac hook strip with seven hooks	74,20	176
16509.B	LINE series - 450 mm polish finished Zamac double towel rail	55,90	174
16509.S	LINE series - 450 mm satin finished Zamac double towel rail	59,50	174
16509.W	LINE series - 450 mm white finished Zamac double towel rail	41,20	174
16510.B	LINE series - 600 mm polish finished Zamac double towel rail	54,20	175
16510.W	LINE series - 600 mm white finished Zamac double towel rail	44,80	175
16515.B	LINE series - Glass utility shelf with polish finished Zamac supports	43,20	174
16515.S	LINE series - Glass utility shelf with satin finished Zamac supports	39,10	174
16515.W	LINE series - Glass utility shelf with white finished Zamac supports	36,40	174
16518.B	LINE series - Polish finished Zamac toilet brush	46,30	177
16518.S	LINE series - Satin finished Zamac toilet brush	45,90	177
16518.W	LINE series - White finished Zamac toilet brush	34,20	177
16519.B	LINE series - Polish finished Zamac toilet paper reserve	38,90	177
16519.S	LINE series - Satin finished Zamac toilet paper reserve	36,70	177
16519.W	LINE series - White finished Zamac toilet paper reserve	32,90	177
16720.2.S	AISI 304 STAINLESS STEEL pictogram	13,90	185
16721.2.S	AISI 304 STAINLESS STEEL pictogram	13,90	185
16722.2.S	AISI 304 STAINLESS STEEL pictogram	13,90	185
16723.2.S	AISI 304 STAINLESS STEEL pictogram	13,90	185
16724.2.S	AISI 304 STAINLESS STEEL pictogram	13,90	185
16730.2.S	AISI 304 STAINLESS STEEL pictogram	13,90	185
16804.S	ROMA series - satin finished STAINLESS STEEL double toilet paper holder	57,50	137
16805.S	ROMA series - satin finished STAINLESS STEEL toilet paper holder	84,20	137
16820.S	ROMA series - 600 mm satin finished STAINLESS STEEL towel rail	22,95	136
16821.S	ROMA series - Satin finished STAINLESS STEEL double hook	16,90	136
16822.S	ROMA series - 600 mm satin finished STAINLESS STEEL towel shelf	90,80	137
16823.S	ROMA series - Satin finished STAINLESS STEEL soap dish	45,30	136
16824.S	ROMA series - Satin finished STAINLESS STEEL utility shelf	47,30	136
16825.S	ROMA series - Satin finished STAINLESS STEEL toilet brush	40,20	137
16826.S	ROMA series - Satin finished STAINLESS STEEL toilet paper roll dispenser	23,65	137
16827.S	ROMA series - Satin finished STAINLESS STEEL towel hoop	21,30	136
16850.B	NIZA POLISH series - 650 mm polish finished STAINLESS STEEL towel rail	40,50	152
16850.N	NIZA POLISH series - 650 mm black finished STAINLESS STEEL towel rail	84,70	152
16850.S	NIZA SATIN series - 650 mm satin finished STAINLESS STEEL towel rail	31,20	146
16851.B	NIZA POLISH series - Polish finished STAINLESS STEEL hook	25,50	153
16851.N	NIZA POLISH series - Black finished STAINLESS STEEL hook	68,10	153
16851.S	NIZA SATIN series - Satin finished STAINLESS STEEL hook	16,65	147
16852.B	NIZA POLISH series - Polish finished STAINLESS STEEL hook	24,95	153
16852.N	NIZA POLISH series - Black finished STAINLESS STEEL hook	67,45	153
16852.S	NIZA SATIN series - Satin finished STAINLESS STEEL double towel rail	17,70	147
16853.B	NIZA POLISH series - Polish finished STAINLESS STEEL double towel rail	116,00	155
16853.N	NIZA POLISH series - Black finished STAINLESS STEEL double towel rail	170,00	155
16853.S	NIZA SATIN series - Satin finished STAINLESS STEEL double towel rail	78,10	149
16854.B	NIZA POLISH series - Polish finished STAINLESS STEEL towel rail	111,00	155
16854.N	NIZA POLISH series - Polish finished STAINLESS STEEL towel rail	165,00	155
16854.S	NIZA SATIN series - Satin finished STAINLESS STEEL towel rail	76,00	149
16855.B	NIZA POLISH series - Polish finished STAINLESS STEEL soap dish	31,70	153
16855.N	NIZA POLISH series - Black finished STAINLESS STEEL soap dish	75,40	153
16855.S	NIZA SATIN series - Satin finished STAINLESS STEEL soap dish	22,10	147
16856.B	NIZA POLISH series - Polish finished STAINLESS STEEL utility shelf	48,80	152
16856.N	NIZA POLISH series - Black finished STAINLESS STEEL utility shelf	95,20	152
16856.S	NIZA SATIN series - Satin finished STAINLESS STEEL utility shelf	39,30	146
16857.B	NIZA POLISH series - Polish finished STAINLESS STEEL toilet brush	40,90	154
16857.N	NIZA POLISH series - Black finished STAINLESS STEEL toilet brush	87,35	154
16857.S	NIZA SATIN series - Satin finished STAINLESS STEEL toilet brush	32,50	148
16858.B	NIZA POLISH series - Polish finished STAINLESS STEEL toilet paper roll dispenser	32,10	154
16858.N	NIZA POLISH series - Black finished STAINLESS STEEL toilet paper roll dispenser	77,20	154
16858.S	NIZA SATIN series - Satin finished STAINLESS STEEL toilet paper roll dispenser	24,45	148
16859.B	NIZA POLISH series - Polish finished STAINLESS STEEL toilet paper reserve	26,40	154
16859.N	NIZA POLISH series - Black finished STAINLESS STEEL toilet paper reserve	71,60	154
16859.S	NIZA SATIN series - Satin finished STAINLESS STEEL toilet paper reserve	21,10	148
16860.B	NIZA POLISH series - Polish finished STAINLESS STEEL towel hoop	26,40	152
16860.N	NIZA POLISH series - Black finished STAINLESS STEEL towel hoop	72,00	152
16860.S	NIZA SATIN series - Satin finished STAINLESS STEEL towel hoop	21,45	146
16861.B	NIZA POLISH series - Polish finished STAINLESS STEEL toothbrush glass	25,50	155
16861.N	NIZA POLISH series - Black finished STAINLESS STEEL toothbrush glass	70,60	155
16861.S	NIZA POLISH series - Satin finished STAINLESS STEEL toothbrush glass	23,10	149
16900.B	BARCELONA series - Polish finished AISI 304 STAINLESS STEEL toilet paper reserve	24,30	141
16900.N	BARCELONA series - Black finished AISI 304 STAINLESS STEEL toilet paper reserve	80,60	141
16900 other colors	BARCELONA series - Black finished AISI 304 STAINLESS STEEL toilet paper reserve	97,00	141
16901.B	BARCELONA series - Polish finished AISI 304 STAINLESS STEEL towel rail	40,70	140
16901.N	BARCELONA series - Black finished AISI 304 STAINLESS STEEL towel rail	115,00	140
16901 other colors	BARCELONA series - Black finished AISI 304 STAINLESS STEEL towel rail	138,00	141
16902.B	BARCELONA series - Polish finished AISI 304 STAINLESS STEEL double towel rail	51,10	141
16902.N	BARCELONA series - Black finished AISI 304 STAINLESS STEEL double towel rail	112,00	141
16902 other colors	BARCELONA series - Black finished AISI 304 STAINLESS STEEL double towel rail	134,00	141
16905.B	BARCELONA series - Polish finished AISI 304 STAINLESS STEEL towel hoop	28,90	140
16905.N	BARCELONA series - Black finished AISI 304 STAINLESS STEEL towel hoop	85,00	140
16905 other colors	BARCELONA series - Black finished AISI 304 STAINLESS STEEL towel hoop	102,00	140
16906.B	BARCELONA series - Polish finished AISI 304 STAINLESS STEEL hook	21,50	142

CODE	DESCRIPTION	PRICE	PG
16906.N	BARCELONA series - Black finished AISI 304 STAINLESS STEEL hook	69,95	142
16906 other colors	BARCELONA series - Black finished AISI 304 STAINLESS STEEL hook	84,00	142
16907.B	BARCELONA series - Polish finished AISI 304 STAINLESS STEEL	24,30	142
16907.N	BARCELONA series - Black finished AISI 304 STAINLESS STEEL	76,15	142
16907 other colors	BARCELONA series - Black finished AISI 304 STAINLESS STEEL	91,40	142
16910.B	BARCELONA series - Glass shelf with polish finished AISI 304 STAINLESS STEEL support	51,10	140
16910.N	BARCELONA series - Glass shelf with blacl finished AISI 304 STAINLESS STEEL support	121,10	140
16910 other colors	BARCELONA series - Glass shelf with blacl finished AISI 304 STAINLESS STEEL support	145,50	140
16911.B	BARCELONA series - Polish finished AISI 304 STAINLESS STEEL soap dish	30,45	142
16911.N	BARCELONA series - Black finished AISI 304 STAINLESS STEEL soap dish	82,90	142
16911 other colors	BARCELONA series - Black finished AISI 304 STAINLESS STEEL soap dish	99,50	142
16912.B	BARCELONA series - Polish finished AISI 304 STAINLESS STEEL soap dish	27,65	142
16912.N	BARCELONA series - Black finished AISI 304 STAINLESS STEEL soap dish	84,30	142
16912 other colors	BARCELONA series - Black finished AISI 304 STAINLESS STEEL soap dish	101,50	142
16913.B	BARCELONA series - Glass for toothbruses with polish finished AISI 304 STAINLESS STEEL support	29,55	143
16913.N	BARCELONA series - Glass for toothbruses with black finished AISI 304 STAINLESS STEEL support	86,80	143
16913 other colors	BARCELONA series - Glass for toothbruses with black finished AISI 304 STAINLESS STEEL support	104,05	143
16914.B	BARCELONA series - Double glass for toothbruses with polish finished AISI 304 STAINLESS STEEL support	38,40	143
16914.N	BARCELONA series - Double glass for toothbruses with black finished AISI 304 STAINLESS STEEL support	100,50	143
16914 other colors	BARCELONA series - Double glass for toothbruses with black finished AISI 304 STAINLESS STEEL support	120,50	143
16915.B	BARCELONA series - Polish finished AISI 304 STAINLESS STEEL toilet brush	46,20	143
16915.N	BARCELONA series - Black finished AISI 304 STAINLESS STEEL toilet brush	107,00	143
16915 other colors	BARCELONA series - Black finished AISI 304 STAINLESS STEEL toilet brush	128,50	143
16916.B	BARCELONA series - Polish finished AISI 304 STAINLESS STEEL towel shelf with lower bar	94,00	143
16916.N	BARCELONA series - Black finished AISI 304 STAINLESS STEEL towel shelf with lower bar	164,50	143
16916 other colors	BARCELONA series - Black finished AISI 304 STAINLESS STEEL towel shelf with lower bar	197,50	143
16917.B	STAINLESS STEEL double towel rail	39,00	141
16917.N	STAINLESS STEEL double towel rail	98,00	141
16917 other colors	STAINLESS STEEL double towel rail	117,50	141
16SS	White DUROLUX toilet seat with frontal opening	81,70	293
17030.W	Air freshener	65,80	329
17051.2.W	Air freshener	48,60	329
17054.A.3	Insect killer	133,00	328
17055.A.3	Insect killer	151,00	328
17055.I.3	Insect killer	303,00	328
17057.I.3	Insect killer	443,00	328
17060.3.S	Insect killer	234,00	328
17100.B	Chromed ABS rechargeable WC auto-sanitizer	153,00	329
17100.W	White ABS rechargeable WC auto-sanitizer	117,00	329
18002.B	65 W electric towel rail	139,20	185
18003.B	65 W electric towel rail	195,00	185
18010.T	Electronic scale	25,90	184
18115.B	Chromed STEEL-nylon belts luggage rack	67,30	263
18116.B	Chromed STEEL-nylon belts luggage rack with backrest	75,00	263
18117.B	Chromed STEEL-faux leather luggage rack	177,50	263
18205.B	Painted STEEL portable coat rack	292,50	262
18206.B	Painted STEEL portable coat rack with upper shelf	391,00	262
186D	Lever operated thermostatic self-closing mixer	449,00	295
187D	Manual shower for bidet	37,90	295
188D	Manual shower for bidet	26,10	295
2040AR	White Durolux toilet seat with frontal opening and cover	64,80	293
21M	White CERAMICS floor settled toilet pan with cistern, S-trap outlet and front opening	499,00	291
21S	White CERAMICS floor settled toilet pan with S-trap outlet and front opening	155,00	291
302A	Exposed siphon with flexible pipe and valve for H5 washbasin	114,50	294
302P	Concealed siphon with flexible pipe and valve for H5 washbasin	97,90	294
303A	Fixed washbasin support	74,30	294
303B	Manual washbasin support	171,50	294
303C	Pneumatic washbasin support	278,40	294

CODE	DESCRIPTION	PRICE	PG
304H	Frame for toilet pans H50 and H50M	228,50	292
31P	White CERAMICS floor settled toilet pan with P-trap outlet and front opening	195,00	291
5000AR	White color pressed WOOD toilet pan seat with cover, universal adaptation	36,10	198
5000AR047	Black color pressed WOOD toilet pan seat with cover, universal adaptation	42,90	198
5000AR492	Grey color pressed WOOD toilet pan seat with cover, universal adaptation	42,90	198
90425.K	Toilet brush replacement	3,15	187
90426.K	Toilet brush replacement	3,15	187
90775.B	Valve with plug	34,10	219
C1	ABS cistern for toilet pan	70,20	292
EJ0026612G	45 liters fire retardant bin	361,50	261
EJ0026655G	200 liters fire retardant bin	521,00	261
EJ00268501	Outdoor POLYETHTLENE ashtray. Grey color	279,00	261
EJ00268502	Outdoor POLYETHTLENE ashtray. Brown color	279,00	261
EJ00268503	Outdoor POLYETHTLENE ashtray. Black color	279,00	261
H11	Ergonomic washbasin kit with manual reclinable mechanism	440,00	294
H12	Ergonomic washbasin kit with pneumatic reclinable mechanism	522,00	294
H14	Ergonomic washbasin kit with two brackets	336,00	294
H42	Ergonomic vertical outlet toilet pan kit with cistern and cover	738,00	293
H42A	Ergonomic vertical outlet toilet pan kit with cistern, cover and thermostatic mixer	835,50	293
H5	White CERAMICS ergonomic washbasin	150,00	194
H50	White CERAMICS ergonomic toilet pan	320,00	292
H500	Adapted bath with seat	CONSULT	289
H501	Walk-in bath	CONSULT	289
H502	Walk-in bath	CONSULT	289
H503	Walk-in bath	CONSULT	289
H504	Walk-in bath	CONSULT	289
H50M	White CERAMICS ergonomic toilet pan	595,00	292
HK	Help Kit	720,20	295
K10	Ergonomic raised toilet seat with cover and front opening	357,00	297
SC300.	Eyewasher POLYPROPYLENE bowl	286,00	302
SC300SS	Eyewasher STAINLESS STEEL bowl	386,00	302
SC310.	Eyewasher POLYPROPYLENE bowl	339,00	303
SC310SS	Eyewasher STAINLESS STEEL bowl	439,00	303
SC320.	Eyewasher POLYPROPYLENE bowl	334,00	302
SC320SS	Eyewasher STAINLESS STEEL bowl	434,00	302
SC330.	Adapted emergency eyewash POLYPROPYLENE collector	450,00	303
SC330SS	Adapted emergency eyewash STAINLESS STEEL collector	550,00	303
SC380.	Eyewasher POLYPROPYLENE bowl	382,00	302
SC380SS	Eyewasher STAINLESS STEEL bowl	482,00	302
SC391.	Module pressurized portable eyewash 18 litres	625,00	307
SC392.	Module pressurized double portable eyewash 18 litres	675,00	307
SC410.	Emergency eyewash with aerated jets and STAINLESS STEEL collector	320,00	303
SC410SS	Emergency eyewash with aerated jets and POLYPROPYLENE collector	420,00	303
SC421.	Manual shower emergency eywash desktop removable	182,00	307
SC422.	Double manual shower emergency eywash desktop removable	238,00	307
SC431.	Shower emergency eyewash with wall support	159,00	307
SC432.	Double shower emergency eyewash with wall support	215,00	307
SC700.	Emergency shower and eyewasher combination POLIPROPILENE bowl and shower head	631,00	305
SC700SS	Emergency shower and eyewasher combination STAINLESS STEEL bowl and shower head	831,00	305
SC710.	Emergency shower and eyewasher combination POLIPROPILENE bowl and shower head	694,00	305
SC710SS	Emergency shower and eyewasher combination STAINLESS STEEL bowl and shower head	894,00	305
SC740.	Combination of POLYPROPYLENE energency shower and eyewash	700,00	305
SC740SS	Combination of STAINLESS STEEL energency shower and eyewash	900,00	305
SC800.	Emergency shower POLYPROPYLENE shower head	307,00	304
SC800SS	Emergency shower STAINLESS STEEL shower head	407,00	304
SC820.	Emergency shower POLYPROPYLENE shower head	122,00	304
SC820SS	Emergency shower STAINLESS STEEL shower head	222,00	304
SC830.	Emergency shower POLYPROPYLENE shower head	148,00	304
SC830SS	Emergency shower STAINLESS STEEL shower head	248,00	304
SCP380.	Platform with emergency eyewash, POLYPROPYLENE sprayer	843,00	306
SCP380SS	Platform with emergency eyewash, STAINLESS STEEL sprayer	943,00	306
SCP730.	Emergency platform with shower and eyewash, STAINLESS STEEL anti-frost autodrain valve	1839,00	306
SCP730SS	Emergency platform with shower and eyewash, POLYPROPYLENE anti-frost autodrain valve	2039,00	306
SCP800.	Platform with emergency shower STAINLESS STEEL sprayer	901,00	306
SCP800SS	Platform with emergency shower POLYPROPYLENE sprayer	1001,00	306

GENERAL CONDITIONS OF SALE

NOFER CONDITIONS OF SALE
The descriptions and photographs contained in our catalogue are with an information purpose only. Our company policy is to improve our products continuously; therefore we reserve the right to change specifications without prior notification

PRICES
Prices do not include VAT or other taxes. The catalog prices can change without prior notification and are valid according to the current rates on the date of expedition.

ORDERS
All orders must be formalized in writing. Essential for the special manufacturing:
- To attach a sketch with the dimensions of the ordered product.
- To pay 50% of the amount at the time of the order acceptance. The remainder shall be paid according to the agreed conditions.
- Prices do not include installation or start-up.

DELIVERY
- The merchandise contained in this catalogue is subject of a process of manufacturing. For this reason the delivery time provided by NOFER, S.L. for the products ordered by the purchaser, shall be considered as approximate or estimated time.
- Any eventual delay in delivery shall not give rise to any penalty or compensation for damages, or allow the buyer to cancel the order.

TRANSPORTATION OF MERCHANDISE
- When the goods are freight due, NOFER, S.L. is exonerated of possible flaws or defects that might be due to transportation of the goods.
- When the goods freight is prepaid, the customer must notify to NOFER, S.L., in writing and within 24 hours of the receipt of the goods, any defect attributable to the forwarder, in order to facilitate the claim of responsibility according to Law 16/1987 of Management of Land Transport and RD 1.111 / 1990 laying down the rules of the LOTT.
- The claim against the carrier for damage or breakdown should be in the act of receiving the packages in case of visible damages and **within 24 hours** of receipt. If the damages were not visible, protest or reservation should be in writing.
- The goods travel always at the buyer's risk, even in cases of special agreements.
- Carriage prepaid: From 500 €.

CLAIMS AND REFUNDS
Will not be accepted after FIFTEEN DAYS from the date of the receipt of the goods. The date of the carrier's delivery note will record the date of receipt of the goods.
No refund without the original NOFER's packaging and the express consent by NOFER, S.L. will be accepted. No refunds are permitted for custom manufactured items.
Any unjustified returned material, if paid, will suffer a minimum of 15% automatic depreciation on the invoiced amount, for management expenses and storage. The depreciation can be increased after an expert valuation.

WARRANTIES
Under the conditions described in the certificates included in the relevant section, the warranty is limited to the replacement of parts and spares that the NOFER, S.L. technical staff recognize, in our company and without compensation of any kind. The warranty does not include transport or solving breakdowns caused by reasons beyond the design or manufacture of the product or originated by improper handling, installation or maintenance, or by the normal wear.

PAYMENT
Up to the granting of the appropriate classification and risk, all operations will be prepaid

SUCCESSIVE OPERATIONS
Deferral of payment of our invoices shall be agreed between both parties. After the set deadlines, we are allowed to post automatically the interest for late payment at the rate of ONE PERCENT per month or fraction of a month.

TAXES
Invoice charged under applicable law.

RETENTION OF TITLE
The goods are considered property NOFER, S.L. until the full payment by the customer, taking NOFER, S.L. until then the retention of title.

JURISDICTION
Will be competent only in case of dispute, the Courts of Barcelona.

REPARATIONS
The reparations will be held for the authorized Assistance Services or in NOFER, S.L., previous the corresponding budget acceptation. IMPORTANT: budget cost 15 €.





DYNAMO STADIUM
MOSCOW, RUSSIA

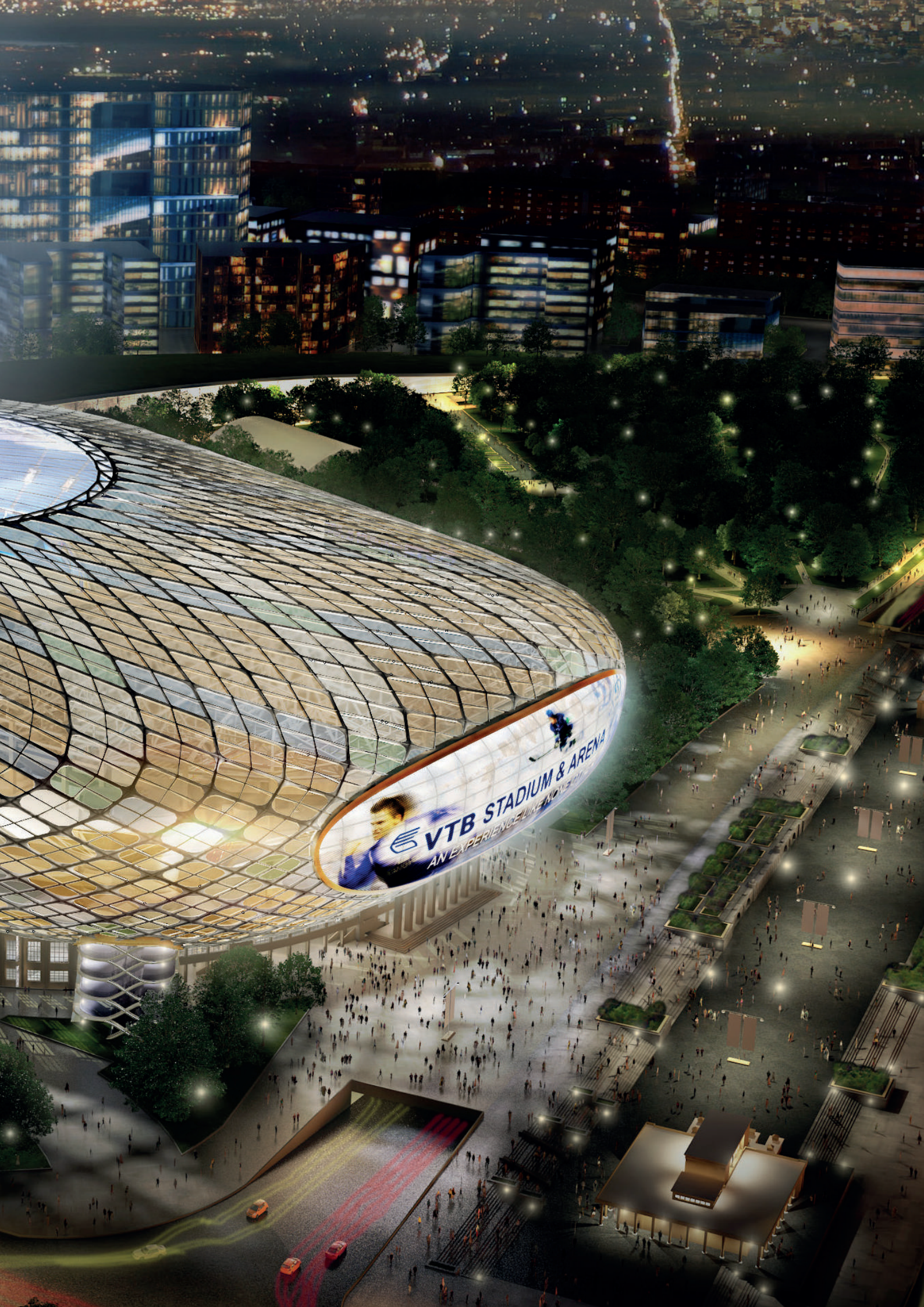
VTB STADIUM & ARENA



AL SHAHEED PARK
KUWAIT CITY, KUWAIT



HOTEL PRADO Y MALECÓN
LA HABANA, CUBA



TALLINN PRISION
TALLINN, ESTONIA



ALEXANDRIA INTERNATIONAL AIRPORT
EGYPT



KAP4
RIYHAD, KINGDOM OF SAUDI ARABIA



HOTEL H10
CANCÚN, MÉXICO



NOFER, S.L.

Ctra. Laureà Miró, 385-387
08980 Sant Feliu de Llobregat
Barcelona - España

+34 934 742 423
+34 934 743 548

nofer@nofer.com
www.nofer.com

GIAMPIERI BOCCHISAFEWORKNOFER S.R.L.

Via Torino, 10
20060 Liscate
Milano – Italia

+39 0249 796 141

info-bocchi@nofer.com

Business group:

APARICI · NOFER · GIAMPIERI dal 1925 rubinetterie milano · BOCCHI SafeWORK · agetar, s.a. · INDUSTRIAS CÁNOVAS S.A.

CAT.NF180.EN